SCHOOL OF
CIVIL ENGINEERING

INDIANA
DEPARTMENT OF HIGHWAYS

Joint Highway Research Project

Final Report

FHWA/IN/JHRP-91/7

USER GUIDE FOR PC-STABL3D

Gennady Moshkovich

PURDUE UNIVERSITY

Joint Highway Research Project

Final Report

FHWA/IN/JHRP-91/7

USER GUIDE FOR PC-STABL3D

Gennady Moshkovich

Final Report

USER GUIDE FOR PC-STABL3D

To: H. L. Michael, Director
Joint Highway Research Project

March 6, 1991
Revised April 23, 1991
Project No: C-36-36N
File No: 6-14-14

From: C. W. "Bill" Lovell
Professor of Civil Engineering
Purdue University,
West Lafayette, Indiana

Subj: User Guide for PC-STABL3D

Attached is the final report on the subject study. The report has been prepared by Mr. Gennady Moshkovich, Graduate Research Assistant, under my direction.

The results of this report will allow the INDOT to analyze three-dimensional slope stability problems with a three-dimensional model, instead of a two-dimensional one.

The program PC-STABL3D has been revised to reduce "bugs" in the previous version of the program, and to make the program "user friendly". The report is, in fact, a Users' Manual for INDOT personal.

The report is submitted for review, comment and acceptance in fulfillment of the referenced study.

Respectfully Submitted

C.W. Lovell

cc.

FINAL REPORT

USER GUIDE FOR PC-STABL3D

by

Gennady Moshkovich
Graduate Research Assistant

Joint Highway Research Project

Project No: C-36-36N
File No: 6-14-14

Prepared as Part of an Investigation
Conducted by the
Joint Highway Research Project
Engineering Experiment Station
Purdue University

In Cooperation with the
Indiana Department of Transportation

and the

U.S. Department of Transportation
Federal Highway Administration

The content of this report reflects the views of the author who is responsible for the facts and accuracy of the data presented herein. The contents do not necessarily reflects the official views or policies of the Indiana Department of Transportation. This report does not constitute a standard, specifications or regulations.

Department of Civil Engineering
Purdue University
West Lafayette, Indiana

March, 1991
Revised April 23, 1991

TECHNICAL REPORT STANDARD TITLE PAGE

1. Report No.	2. Government Accession No.	3. Recipient's Catalog No.
FHWA/INJHRP-91/7		

4. Title and Subtitle	5. Report Date: March 6, 1991. Revised April 23, 1991.
User Guide for PC-STABL3D	6. Performing Organization Code

7. Author(s)	8. Performing Organization Report No.
Gennady Moshkovich	FHWA/INJHRP-91/7

9. Performing Organization Name and Address	10. Work Unit No.
Joint Highway Research Project Civil Engineering Building Purdue University West Lafayette, IN 47907	11. Contract or Grant No.
	13. Type of Report and Period Covered: Final Report
12. Sponsoring Agency Name and Address Indiana Department of Transportation State Office Building 100 North Senate Avenue Indianapolis, IN 46204	14. Sponsoring Agency Code

15. Supplementary Notes

16. Abstract

PC-STABL3D is the program for IBM PC compatible computers, developed to handle general stability analysis of three-dimensional slopes. Random generation routines are invoked to create trial failure surfaces, which are analyzed using the limiting equilibrium approach. The current version of PC-STABL3D is enhanced by a graphical pre/postprocessor, which facilitates creation and edition of data files, examination of problem geometry, and analyzing of the obtained failure surfaces. After the failure surfaces are generated and their factors of safety are computed, the program performs statistical analysis of received factors of safety, and calculates minimum statistical factor of safety. The information about minimum factor of safety increases probability that the critical failure surface found by the program is indeed the one with minimum factor of safety. The manual also contains a step-by-step tutorial and example problems which are solved using PC-STABL3D. The contents of this report summarize a series of previous research efforts relating to three-dimensional slope stability, conducted under the guidance of Prof. C. W. Lovell and Prof. J-L. Chameau.

17. Key Words	18. Distribution Statement
slope stability, three-dimensional, computer modeling, statistical factor of safety	No restrictions. This document is available to the public through the National Technical Information Service, Springfield, Virginia 22161

19. Security Classif. (of this report)	20. Security Classif. (of this page)	21. No. of Pages	22. Price
Unclassified	Unclassified	250	

Form DOT F 1700.7 (8-69)

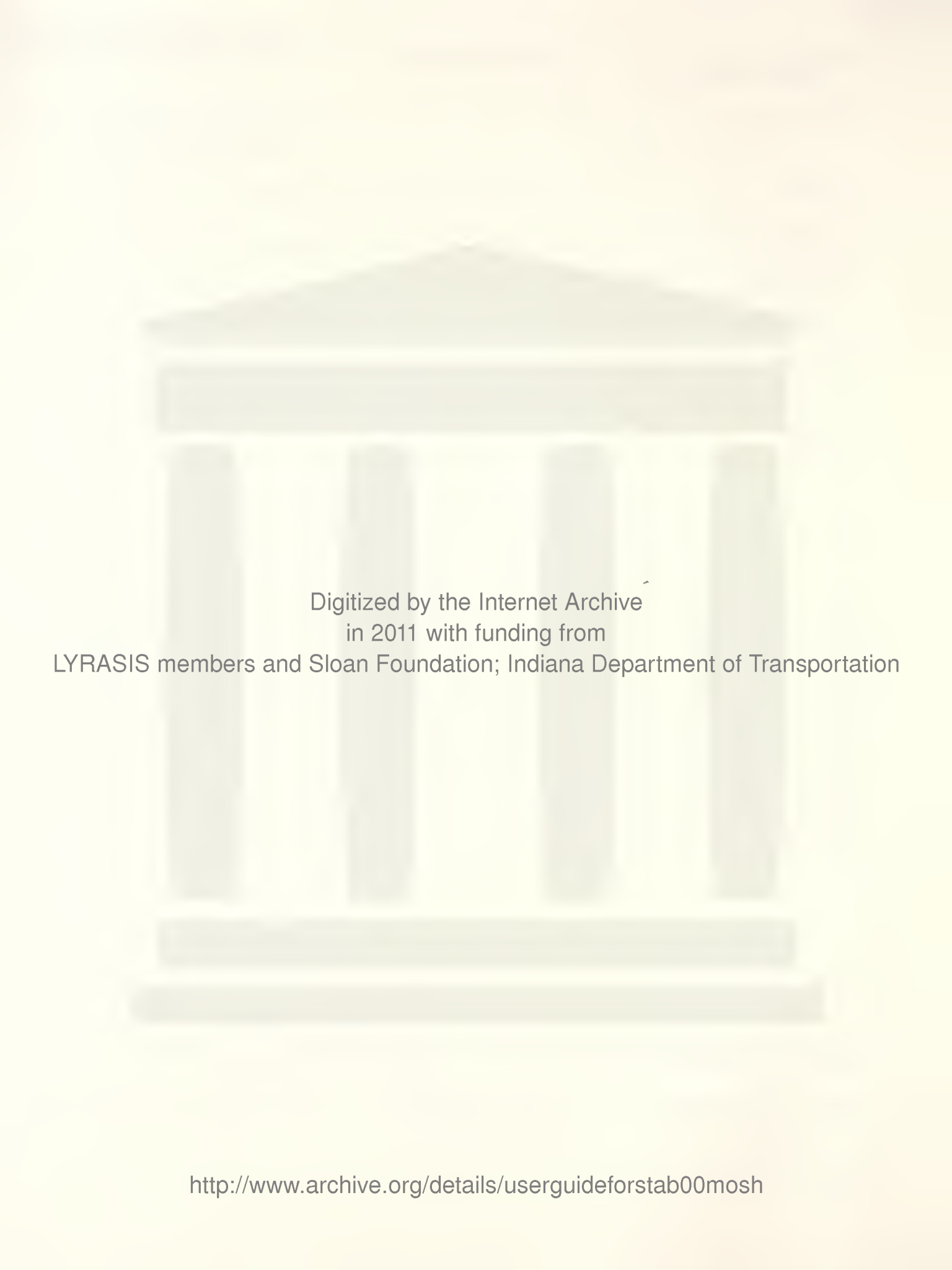
Digitized by the Internet Archive
in 2011 with funding from
LYRASIS members and Sloan Foundation; Indiana Department of Transportation

http://www.archive.org/details/userguideforstab00mosh

ACKNOWLEDGMENTS

I wish to express my sincere gratitude and thanks to Professor C. W. Lovell for his guidance and attention during the time of this research. Thanks are also extended to Professor D. Frost who spent his valuable time to share his ideas and to offer his moral support.

My thanks to William Sisiliano and Nadim Raza from the Indiana Department of Transportation for their suggestions on improvement of the program.

Financial support for this project was provided by the INDOT and the Federal Highway Administration through the Joint Highway Research Project, School of Civil Engineering, Purdue University, West Lafayette, Indiana.

I am deeply thankful to all my friends who helped me during the entire time at Purdue University.

ABSTRACT: PC-STABL3D is the program for IBM PC compatible computers, developed to handle general stability analysis of three-dimensional slopes. Random generation routines are invoked to create trial failure surfaces, which are analyzed using the limiting equilibrium approach. The factors of safety predicted by the program are statistically analyzed using the Weibull's distribution and the minimum statistical factor of safety is calculated as a result of this analysis. The information about minimum statistical factor of safety may help user to evaluate reliability of the obtained critical failure surface. The current version of PC-STABL3D is enhanced by a graphical pre/postprocessor, which facilitates creation and edition of data files, examination of problem geometry, and analyzing of the obtained failure surfaces. The manual also contains a step-by-step tutorial and example problems which are solved using PC-STABL3D. The contents of this report summarize a series of previous research efforts relating to three-dimensional slope stability, conducted under the guidance of Prof. C. W. Lovell and Prof. J-L. Chameau.

TABLE OF CONTENTS

1.0 INTRODUCTION 1

2.0 PROBLEM GEOMETRY 2
2.1 Soil Boundaries 5
2.2 Definition of Searching Boundaries . . 5
2.2.1 Definition of the Main Sliding Axis 7
2.2.2 Ground Surface Boundary 8
2.2.2.1 Limits in Y Direction . . 8
2.2.2.2 Limits in X Direction . . 8
2.2.2.3 Boundaries Within the Soil Mass 13

3.0 SOIL PARAMETERS AND GROUND WATER 14
3.1 Soil Parameters 14
3.2 Ground Water 14

4.0 DATA PREPARATION 15

5.0 GRAPHICAL PRE/POSTPROCESSOR 20
5.1 Overview 20
5.2 Creation and Edition of Data Files . . 22
5.3 Examining of the Surface Geometry . . . 34

6.0 MISCELLANEOUS INFORMATION 40
6.1 Modification and Revisions of PC-STABL3D 40
6.2 Units 41
6.3 Problem Size Limitations 42

7.0 RESULTS 42

8.0 CONCLUSIONS 42a

REFERENCES 43

APPENDICES 44
APPENDIX A STATISTICAL ANALYSIS 45
APPENDIX B EXAMPLES 49
APPENDIX C PROGRAM SOURCE CODE 128
APPENDIX D NEGATIVE NUMBERS FOR PRINTS . 250

LIST OF FIGURES

Figure 1	System of Coordinates (After Thomaz, 1986)	3
Figure 2	Grid of Cross Sections (After Thomaz, 1986)	4
Figure 3	Main Sliding Axis of the Cross Section	6
Figure 4	Plan View of the Slope	8
Figure 5	Definition of Limits in Y Direction	10
Figure 6	Definition of Limits in X Direction	11
Figure 7	Definition of Limits in Z Direction	12
Figure 8	Main Menu	21
Figure 9	Prompt for Name of Data File	23
Figure 10	Prompt for the Number of Grid Points	24
Figure 11	Prompt for the Horizontal Coordinates of Nodes	25
Figure 12	Prompt for the Vertical Coordinates of Nodes	26
Figure 13	Prompt for the Failure Surface Generation Data	28
Figure 14	Prompt for the Initiation Values of Surface Generation	29
Figure 15	Prompt for the Soil Properties	30
Figure 16	Prompt for the Pore Pressure Model	31
Figure 17	Prompt for the Coordinates of Piezometric Surfaces	33
Figure 18	Pop-up File Listing	35
Figure 19	Prompt for the Cross Section Number	36
Figure 20	Example of a Cross Section	37
Figure 21	Example of a Contour Plot	39
Figure B1	Illustration for Example 1	49
Figure B2	Illustration for Example 2	69
Figure B3	Illustration for Example 3	90
Figure B4	Illustartion for Example 4	109

1.0 INTRODUCTION

PC-STABL3D is a computer program written in FORTRAN 77 computer language for the general solution of three dimensional slope stability problems. It is compiled using a Microsoft FORTRAN 4.1 (R)[1] compiling package. The calculation of the factor of safety against the instability of a slope is performed by the general three-dimensional method of columns developed at Purdue University (Chen, 1981; Thomaz, 1986).

PC-STABL3D features unique random techniques for generation of potential failure surfaces for subsequent determination of the most critical surface and its corresponding factor of safety. The surfaces are generated within limits determined by the user.

PC-STABL3D is supplied with a graphical pre/postprocessor to facilitate and visualize the input/output process. The pre/postprocessor includes a simple editor developed for the creation and editing of the PC-STABL3D data files. Graphical capabilities of the pre/postprocessor allow the user to check the correctness of the problem geometry and to view resulting failure surfaces. The graphical pre/postprocessor is written in the QuickBASIC 4.5 (R)[2] computer language.

The program performs statistical analysis of received factors of safety. The value of the minimum statistical factor of safety is calculated as a result of this analysis. The analysis is performed using the extreme value distribution for minimums. This distribution is also called Weibull's distribution. The theoretical background for this analysis is presented in Appendix A.

---

[1] Microsoft FORTRAN 4.1 is a registered trademark of Microsoft Corporation.

[2] QuickBASIC 4.5 is a registered trademark of Microsoft Corporation.

Appendix B contains examples of the input and output files. These examples show capabilities of PC-STABL3D to predict factor of safety for concave in plan slopes. The time to run these examples with 500 iterations using PC 486 was an average of 4-5 minutes. The source code of the program can be found in Appendix C. The first part is the source code of the main program, and the second is the source code of the grapfical pre/postprocessor.

The minimum memory required for the program is 640kB. Though the program is available for computers with and without a math coprocessor, it is advisable to run the program with a math coprocessor to increase the speed of calculations.

This manual is not intended to totally explain how PC-STABL3D operates or what assumptions are made to arrive at a solution. For a more detailed explanation of the logical operation of PC-STABL3D and mathematical models employed refer to Thomaz (1986) and Chen (1981).

2.0 PROBLEM GEOMETRY

To begin, the user must plot the problem geometry to scale on a rectangular coordinate grid. Due to the three-dimensional nature of the problem, the following procedure is suggested in order to prepare data points for the program. The system for representing the geometry of the problem will consist of a three-dimensional cartesian system. The user must define three orthogonal axes, X, Y, and Z. The horizontal plane should be defined by axes X and Y; then the Z will represent the elevations of the layers and ground profiles. During the determination of this coordinate system the user should remember that the direction of the slides being investigated is along the Y axis. Figure 1 shows the representation of the sliding axes described above.

The next step consists of defining the points (coordinates) that will represent the geometry. The way these coordinates are to be defined is shown on Figure 2. The user will need to define a grid consisting of cross sections of the slope parallel to the X and to the Y axes. The spacings between these

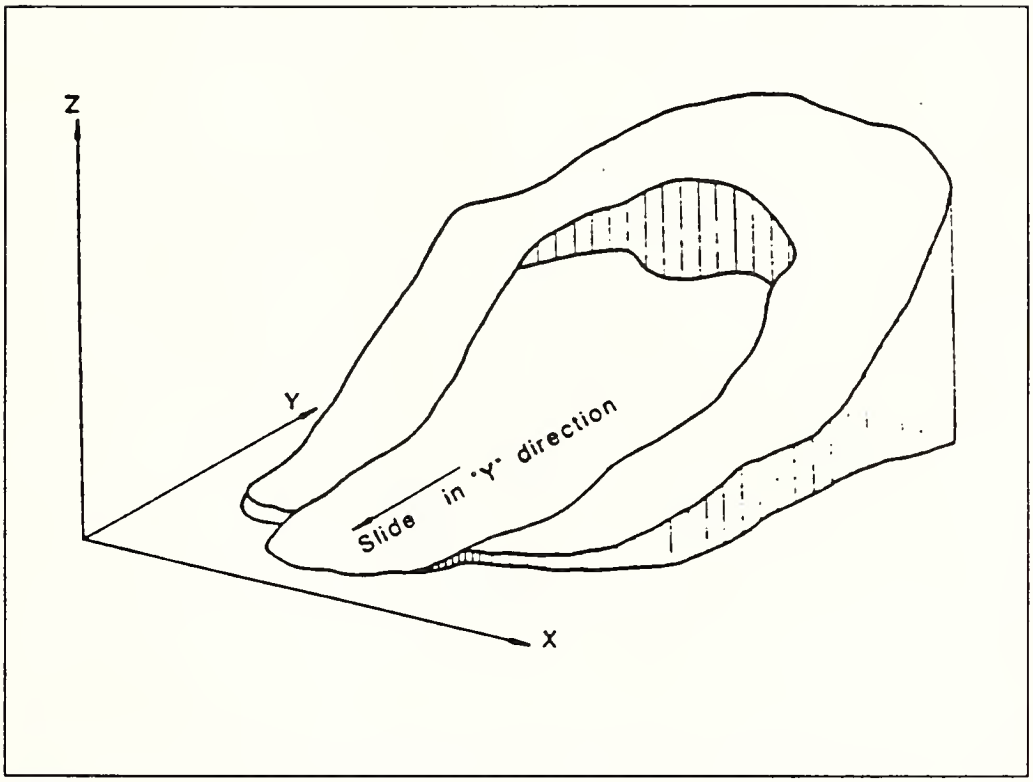

Figure 1 System of Coordinates (After Thomaz, 1986)

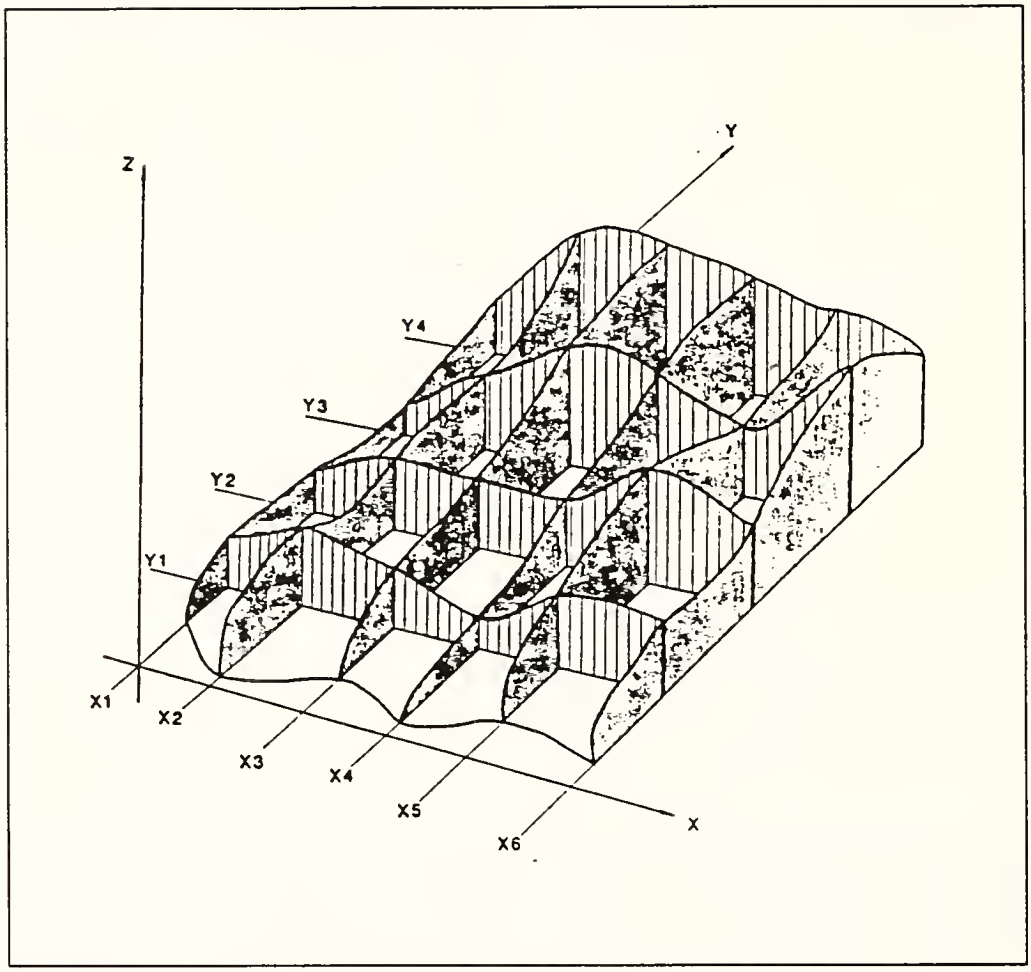

Figure 2 Grid of Cross Sections (After Thomaz, 1986)

cross sections do not need to be the same, nevertheless, it is highly recommended that the variations in the spacing are minimal.

The horizontal projection of the resulting mesh can be seen as a series of axes in the X direction and another series in the Y direction. The intersections of this mesh are the points that will define the geometry of the problem on the horizontal surface.

These points can be perceived as locations of boreholes. For each of the points, the user must define the elevations of the ground surface, as well as the elevations of the different soil layers and piezometric surfaces.

2.1 Soil Boundaries

After the grid has been prepared, the user needs to define soil boundaries by specifying the elevations of the different soil layers at each of the nodes of the grid. The resulting profile will be represented by line segments connecting the nodes of the corresponding soil layer for each cross section in the X and Y directions (Figure 3). The position of the cross sections should be selected so that no important feature of the subsoil is incorrectly represented. To simplify positioning of cross sections the user can use the pre/postprocessor, which is described later in this manual.

2.2 Definition of Searching Boundaries

The appropriate choice of the searching boundaries can considerably optimize the surface searching process and hence reduce the amount of time involved in the search by avoiding the generation of "useless" surfaces. Useless surfaces are those with little or no probability of being

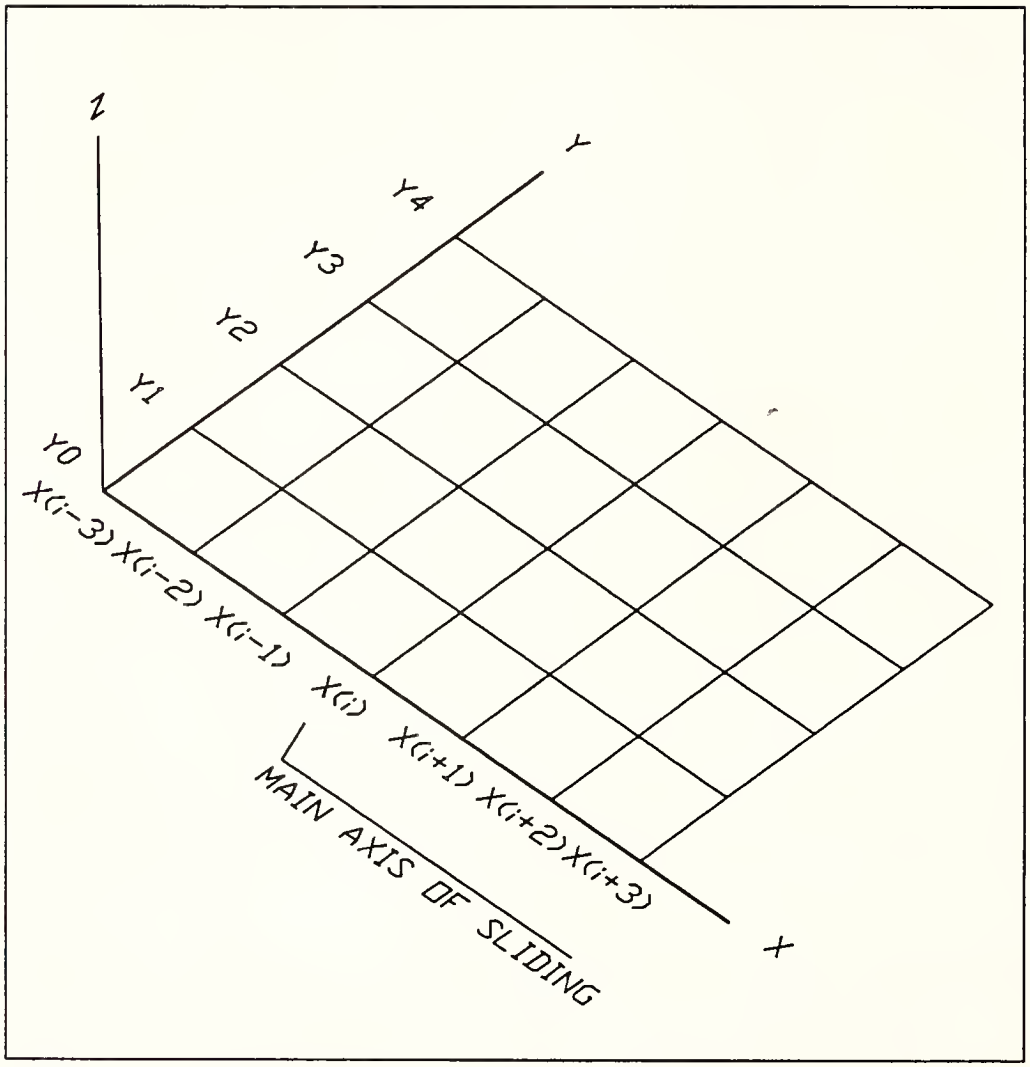

Figure 3 Main Sliding Axis of the Cross Section

critical (surfaces passing through sound rock, for instance). Some engineering judgment is thus required when defining the region to be searched.

It should be noted that even if the boundaries are very wide, the resulting critical region will still be the same. Nevertheless, the amount of time necessary to arrive at this final region will be much higher, since a higher percentage of the generated surfaces will probably lie outside of the critical region of the slope.

Definition of the boundaries consists of three steps:

- Definition of the main sliding axis;
- Definition of the region on the ground surface within which the surfaces are predicted to initiate and to terminate;
- Definition of the region within the soil mass which is to be processed by the program.

2.2.1 Definition of the Main Sliding Axis

The program requires the creation of a main sliding axis, which is to be defined parallel to the Y axis as it is shown on Figure 4. The main sliding axis is actually one of the cross sections already defined above. The location for this cross section should be chosen in a way so that it will lie along or as close as possible to the axis of symmetry of the sliding mass. For instance, if the user previously defined 11 cross sections in the Y direction, the best choice for the main sliding axis would be the cross section number 6. It is very important to select an appropriate cross section for the main sliding axis, because it will define initial points for failure surface generation.

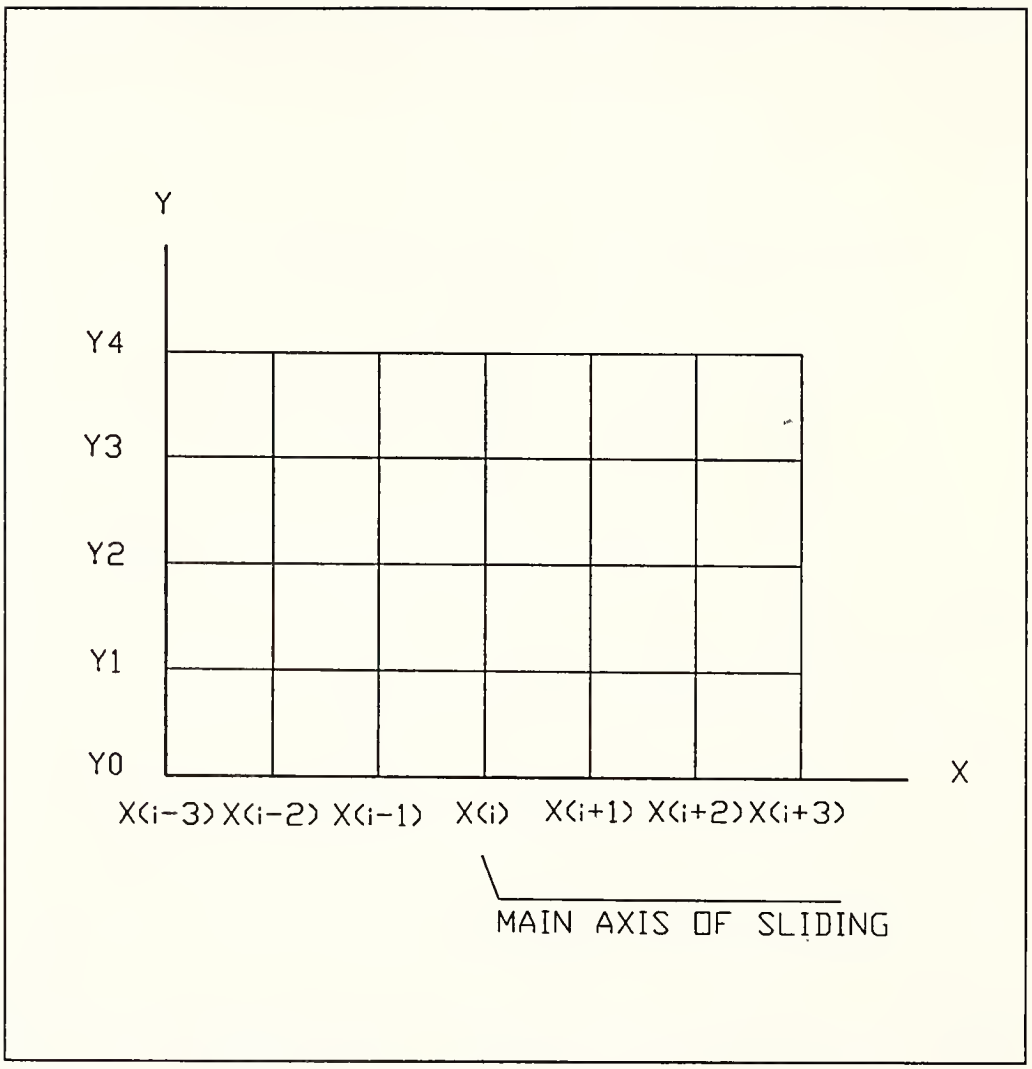

Figure 4 Plan View of the Slope

2.2.2 Ground Surface Boundary

The ground surface boundary is the region where the intersection line between failure surfaces and the ground surface is located. The best way to understand how this boundary is established is to consider a plan view of the slope (Figure 5). The previously-defined cross sections now appear as a mesh, and intersections between failure surfaces and the ground surface will be represented by the polygon. Now the user will have to define boundaries for this polygon in the X and Y directions.

2.2.2.1 Limits in Y Direction

The user must define limits in the Y direction on the main axis of sliding (Figure 6). To establish the region within which the initial points of the generated surface are expected to lie, define a minimum value $Y_{i\,min}$ and a $\Delta Y_{i\,min}$. The trial surfaces will be initialized only from points located in the region between coordinates $Y_{i\,min}$ and $Y_{i\,min} + \Delta Y_{i\,min}$. Similarly the user must define the region on the main sliding axis for termination of the trial surfaces, which will be contained between coordinates $Y_{f\,min}$ and $Y_{f\,min} + \Delta Y_{f\,min}$. After the limits in the Y direction are defined, the user will need to define limits in the X direction.

2.2.2.2 Limits in X Direction

The procedure to define the limits in the X direction is basically the same as that for the Y direction, but now these regions must be defined for each of the cross sections in the X direction (Figure 7). The user will define the leftmost coordinate of the surface initiation $X_{i\,min}$ with the corresponding surface initiation interval $\Delta X_{i\,min}$, and the leftmost coordinate of the surface termination $X_{f\,min}$ with the corresponding surface termination interval $\Delta X_{f\,min}$.

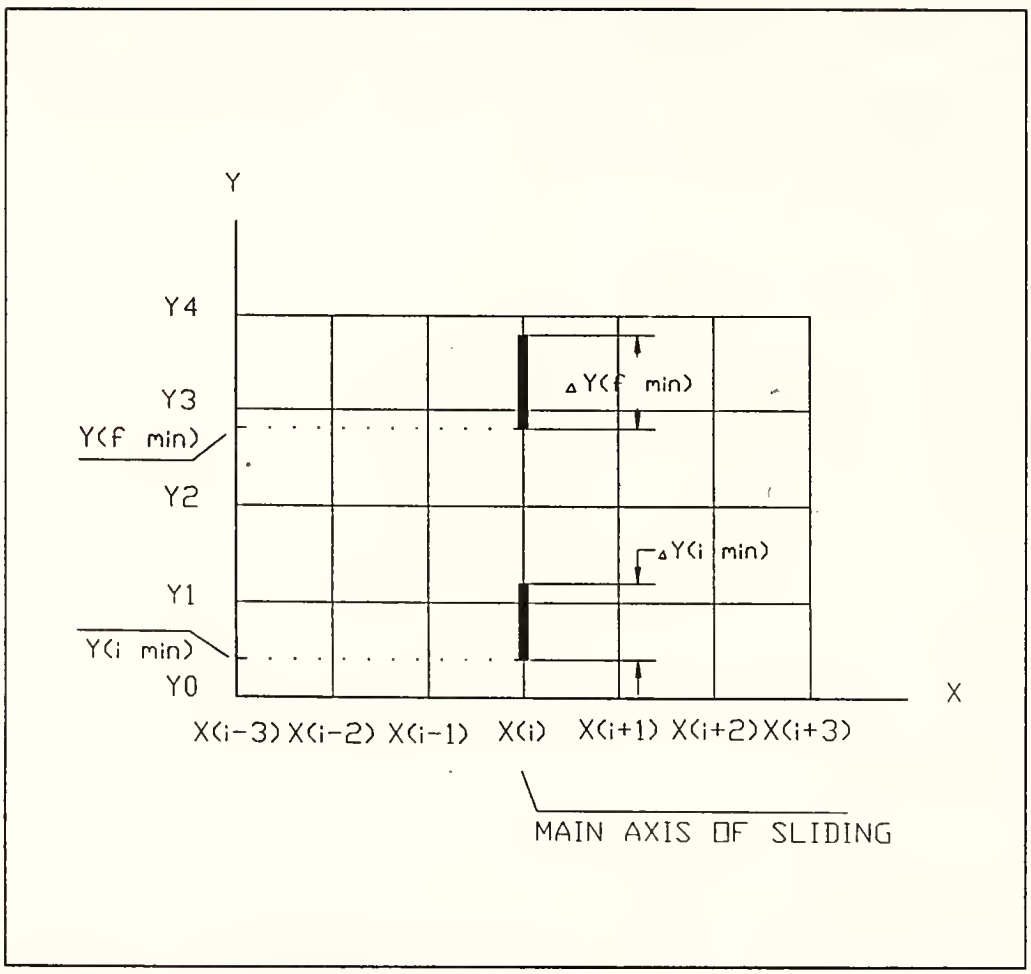

Figure 5 Definition of Limits in Y Direction

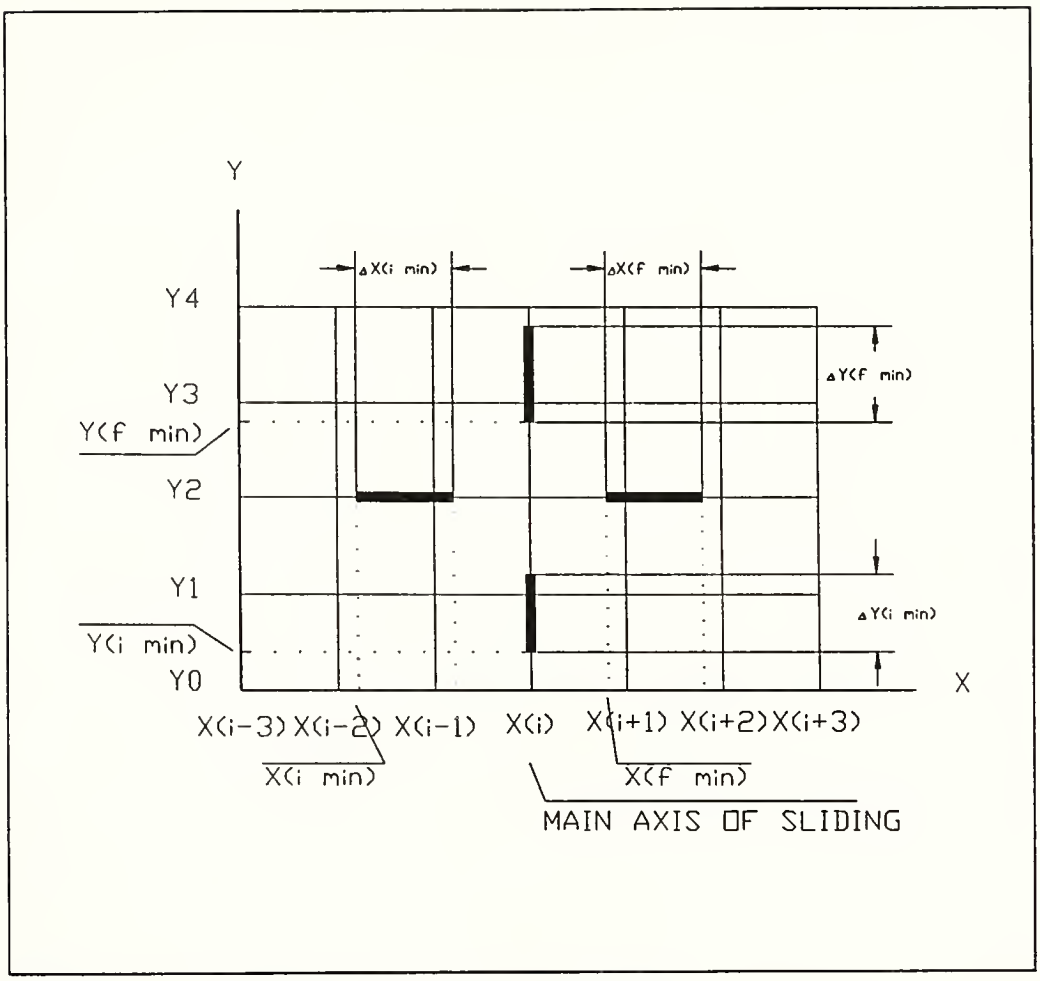

Figure 6 Definition of Limits in X Direction

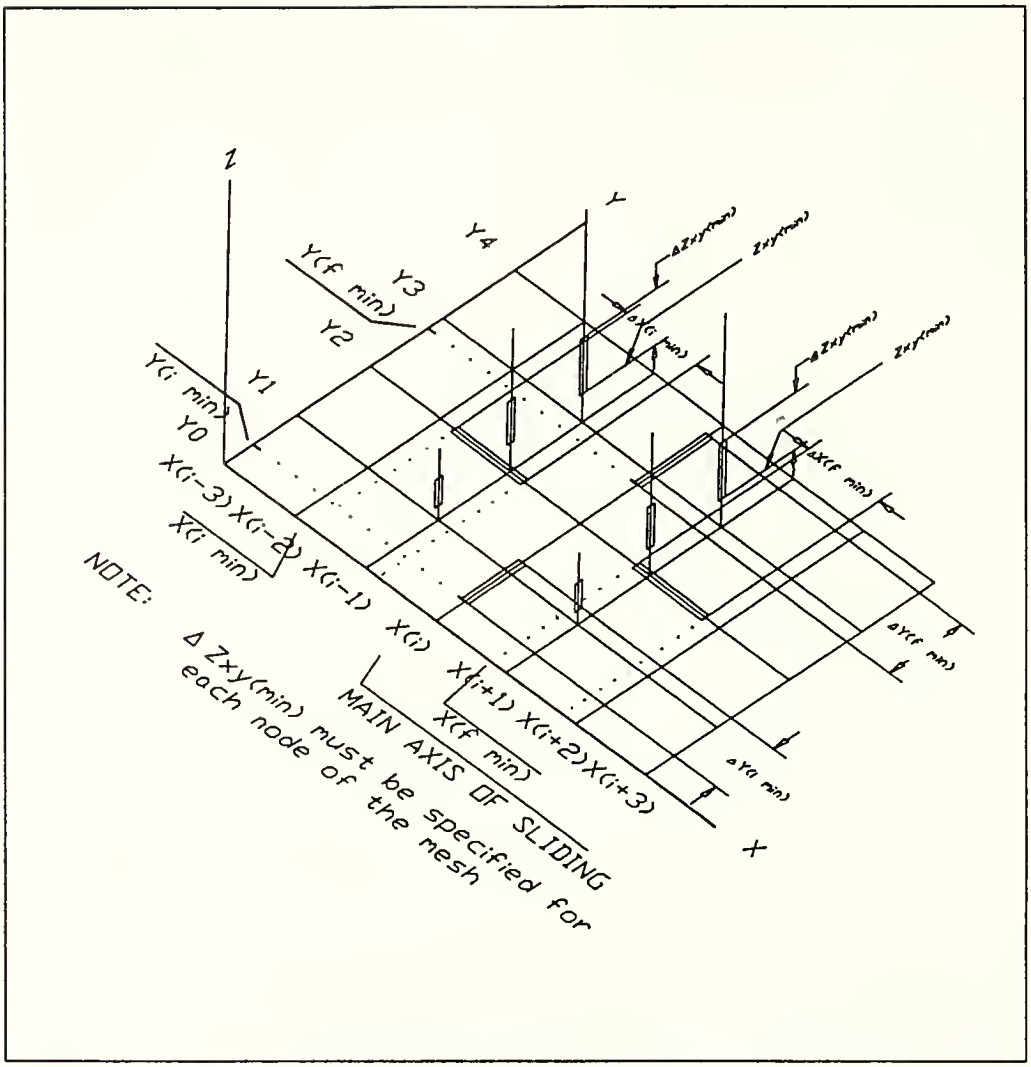

Figure 7 Definition of Limits in Z Direction

If these values were defined correctly, the failure surface will be initiated in the region from $X_{i\,min}$ to $X_{i\,min} + \Delta X_{i\,min}$, and terminated in the region from $X_{f\,min}$ to $X_{f\,min} + \Delta X_{f\,min}$.

2.2.2.3 Boundaries Within the Soil Mass

After the user has determined the surface boundaries of the sliding mass, the region inside the soil mass where the failure surfaces are to be generated must be defined.

The procedure used to define the region for surfaces generation within the soil mass (in Z direction) is very similar to that used to define the surface boundaries. For each node of the mesh the user will define the minimum coordinate Z_{min} and the distance ΔZ_{min}. The minimum coordinate Z_{min} is the maximum depth of failure surface generation, the coordinate $Z_{min} + \Delta Z_{min}$ is the minimum depth of the failure surface generation.

Boundaries within the soil mass can be used to limit surface generation to a specified region, for instance, when the soil profile contains weak layers, or sound rock. It is also helpful to make several computer runs of the program progressively optimizing the region to be searched, in order to achieve the most reliable solution.

The routine for surface generation contains automatic checks and numerical bias to control the shapes of the surfaces; however the imposed search limit boundary restrictions always have precedence over any other methodology used in the program.

3.0 SOIL PARAMETERS AND GROUND WATER

3.1 Soil Parameters

Each soil type is described by the following set of isotropic parameters: the moist or saturated unit weight γ, the Mohr-Coulomb strength intercept c (cohesion), and the Mohr-Coulomb strength angle ϕ. The program performs calculations using the total weight and total boundary force approach. However with the measurement or prediction of pore pressure, either a total stress or an effective stress analysis may be undertaken. Moist unit weight is assumed above the water level; saturated unit weight below it.

3.2 Ground Water

The ground water conditions can be represented using one of the two descriptors: coordinates of the piezometric surfaces and values of the pore pressure ratio. The former is most commonly applied.

NOTE: *When there is no ground water present, water conditions are described as having a pore pressure ratio equal to zero, and γ is the moist unit weight.*

In the two dimensional program (PC STABL 5M), the water pressure produced by a piezometric surface may be defined by three options. In the current program only the simple equivalent hydrostatic value is used. The user will need to define piezometric surfaces involved in the analysis in the same way as for the soil layers. For each point of the mesh, the elevation corresponding to each of the piezometric surfaces must be described.

The piezometric surfaces may lie anywhere within the region being defined. They can be above the ground surface or coincide with it at different points. If more than one piezometric surface is defined and one of them represents a body of water, such as lake or river, it should be assigned to the first layer of the soil. The program will check if the first piezometric surface lies above the ground, and wherever it does, it will add the weight of water to the calculations of the total weight of the column. If a piezometric surface which is located above the ground surface, is not the one assigned to the top layer, the water will be considered for pore pressure calculation only.

The pore pressure ratio r_u is the ratio of the pore pressure to the vertical total stress at the given elevation.

4.0 DATA PREPARATION

The user can create input files for the PC-STABL3D program using either the supplied pre/postprocessor or a conventional editor. In both cases the format of the data file will be the same. Therefore the input file format, described in this section, is applicable to files created with both the conventional editor and the pre/processor. In order to simplify generation of data file with an editor, all data used in the program are read in the free-form format; hence users do not need to be concerned about missing periods or extra blanks between numbers.

The format of the data file is described below. A new line should be started whenever a DATA CARD statement is encountered.

SOIL PROFILE

DATA CARD 'PC-STABL3D Version 2.0'

NOTE: *The previous data card is intended for identification of the PC-STABL3D data files. Therefore it must be printed exactly as it appears in the text of this manual, starting from the first left column.*

DATA CARD Number of cross sections in the X direction

Number of cross sections in the Y direction

DATA CARD Coordinates X of cross sections parallel to the Y axis

DATA CARD Coordinates Y of cross sections parallel to the X axis

NOTE: *For the two previous data cards, put as many data entries as fit on each line, until the last value is reached.*

DATA CARD Coordinates Z for all nodes of the cross section X_1, starting from the intersection of cross sections

X_1 and Y_1, and for all subsequent intersections of X_1 and Y_i

NOTE: *Repeat the previous data card for each consequent cross section X_i. Put as many data entries as fit on each line, until the last value is reached.*

GENERATION LIMITS

DATA CARD The number i of the cross section X_i corresponding to main sliding axis.

DATA CARD Minimum coordinate $Y_{i\ min}$ of the trial surfaces initiation region for the main sliding axis

Interval of trial surfaces initiation $\Delta Y_{i\ min}$

Minimum coordinate $Y_{f\ min}$ of the trial surfaces termination region for the main sliding axis

Interval of trial surface termination $\Delta Y_{f\ min}$

DATA CARD Minimum coordinate $X_{i\ min}$ of the trial surfaces initiation region for the second cross section parallel to the Y axis (Y_2)

Interval of trial surface initiation $\Delta X_{i\,min}$ for the same cross section

NOTE: *Repeat previous data card for all consecutive cross sections parallel to the Y axis starting from cross section Y_3, and terminating with the one before the last.*

DATA CARD Minimum coordinate Z_{min}, below which surfaces will not be generated for the each node of the first cross section parallel to the Y axis (Y_1)

Interval ΔZ_{min}, such that surfaces would not be generated above the coordinate $Z_{min} + \Delta Z_{min}$ for the corresponding node.

NOTE: *For the previous data card put as many data values for the all consecutive nodes of the first cross section, then repeat this data card for consecutive cross sections parallel to the Y axis terminating with the last cross section.*

SOIL PROPERTIES

DATA CARD Moist or saturated unit weight γ.

Strength intercept c, or c' for effective stress analysis.

Strength angle ϕ, or ϕ' for effective stress analysis

NOTE: *Repeat previous data card for each soil*

WATER CONDITIONS

DATA CARD Water conditions representation code. Enter 1 for pore pressure ratio, 0 for piezometric surface

IF PORE PRESSURE RATIO IS SELECTED, THEN:

DATA CARD Pore pressure ratio r_u

IF PIEZOMETRIC SURFACE IS SELECTED:

DATA CARD Coordinate Z of the piezometric surface for each node of the first cross section parallel to the X axis

NOTE: *Repeat previous data card for all consecutive cross section in the Y direction, then repeat all soil condition data cards for each soil layer*

5.0 GRAPHICAL PRE/POSTPROCESSOR

5.1 Overview

A graphical pre/postprocessor facilitates creation of the data files and allows the user to view geometry of the original slope and failure surfaces. The following operations can be performed using a pre/postprocessor:

- creating of the data file
- editing of the existing data file
- viewing the cross sections of the existing slope
- viewing the contour plan of the existing slope
- viewing the cross section of the slope after failure
- viewing the contour plan of the slope after failure

The convenience of the pre/postprocessor operation is facilitated by use of the sliding bar and pop-up menus. The picture of the main menu which appears on the computer screen after the program is invoked is shown on Figure 8. The user can choose one of the following options from the main menu:

1. Create Data File
2. Edit Existing Data File
3. Read Data File
4. Plot 3D Geometry
5. Plot Cross Sections
6. Run PC-STABL3D
7. Plot 3D Surface Contours
8. Plot Surface Cross Section

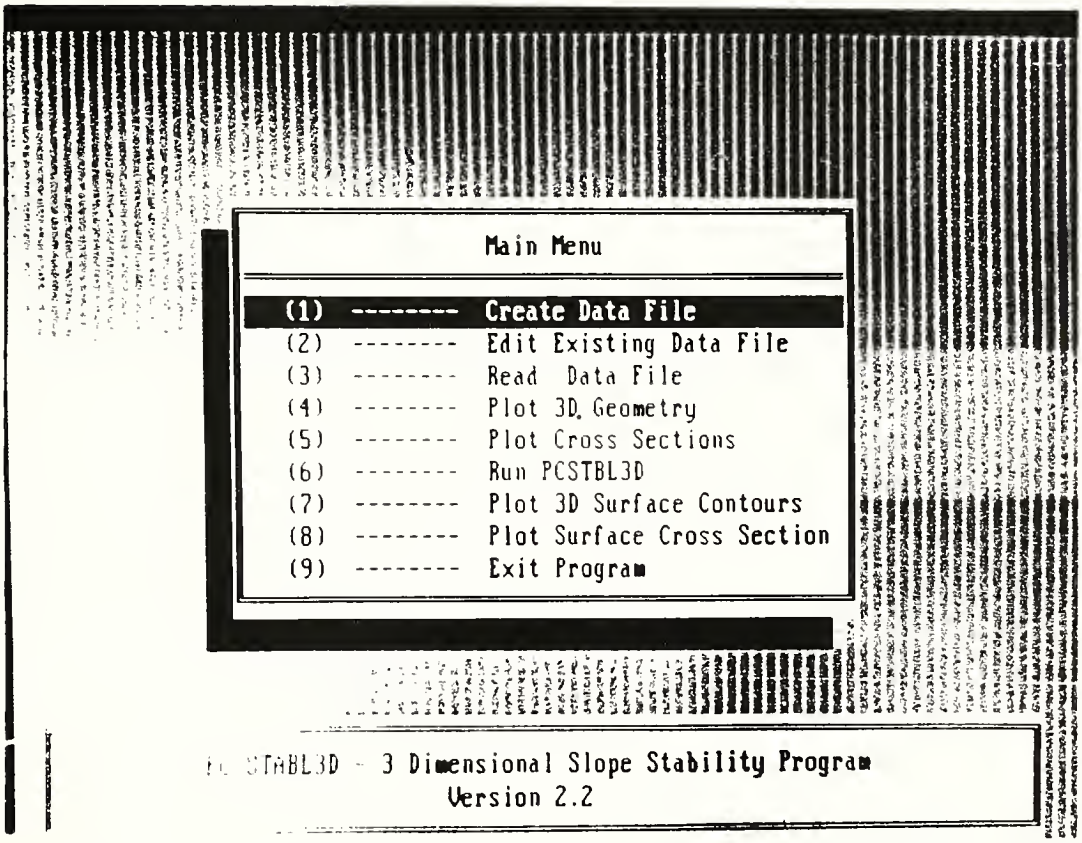

Figure 8 Main Menu

9. Exit Program

The user can examine the options, moving the highlighting bar with the Up" and "Down" arrow keys, and choose the option by pressing the "Enter" key. The "Esc" key will bring the user to the previous screen or to the previous input field. The subsequent paragraphs describe a typical session with the pre/postprocessor.

5.2 Creation and Edition of Data Files

To start creation of the data file, choose "Create Data File" option and press "Enter". The program will prompt for the name of the file where the data are contained, as shown on Figure 9. Note that if a file with the same name already exists, it will be overwritten, and its contents will be lost. Therefore the user must be certain to use an original file name. An edition can be suspended at any time by pressing "Ctrl" and "End" keys simultaneously. After the name of the data file has been entered, press "Enter" to go to the next screen.

This screen (Figure 10) prompts for the number of grid points in X and Y directions and number of soil layers. As previously mentioned, the grid will be used to represent the soil profile. If an error has been made entering the numerical values, go back by pressing the "Esc" key. Press the "Enter" key after each value is entered to go to the next field. The next screen (Figure 11) prompts for the actual coordinates of the points. The user enters coordinates subsequently first for all points in X direction and then for all points in Y direction. After the grid has been entered, the computer prompts for the Z coordinate of the soil for each node of the mesh (Figure 12). This procedure

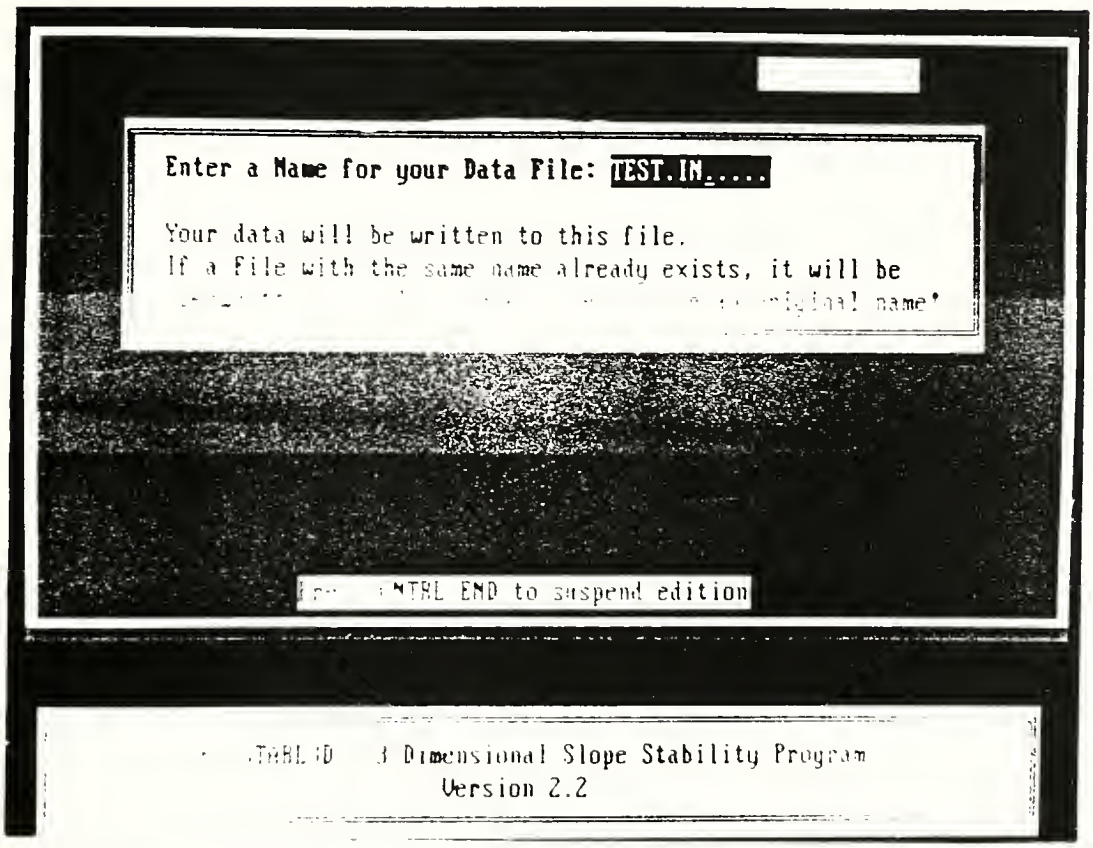

Figure 9 Prompt for Name of Data File

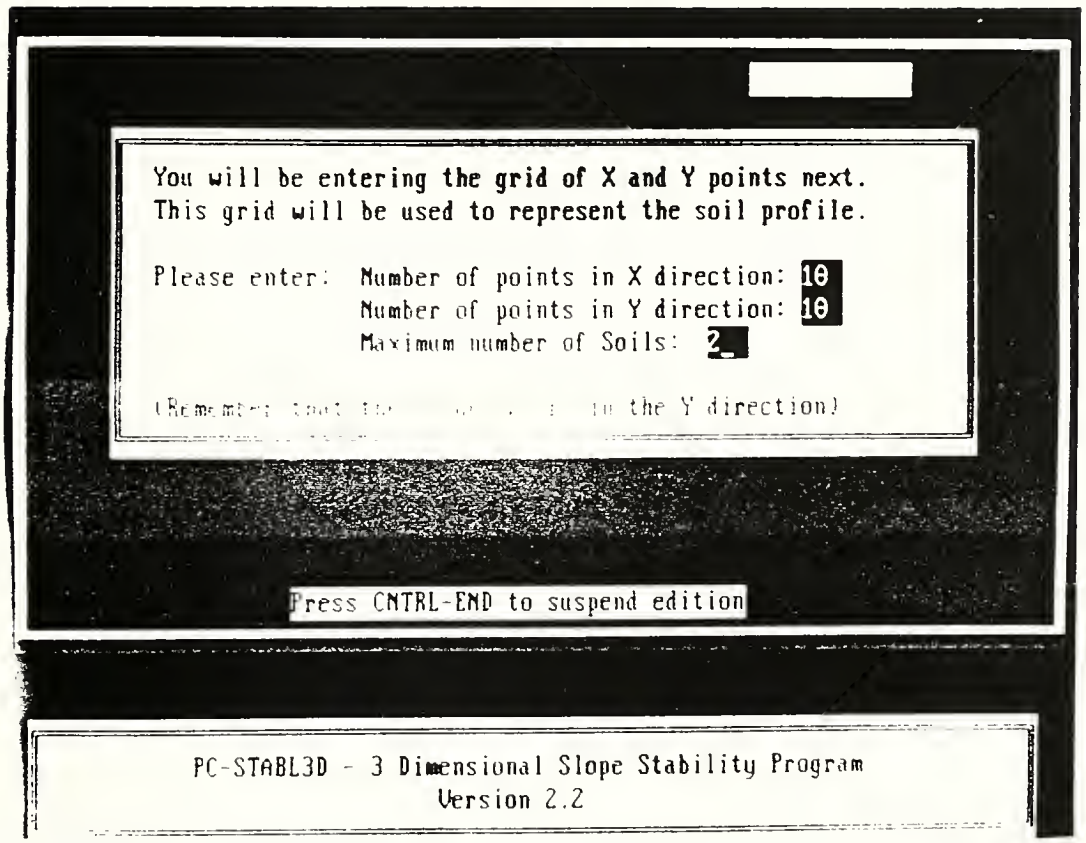

Figure 10 Prompt for the Number of Grid Points

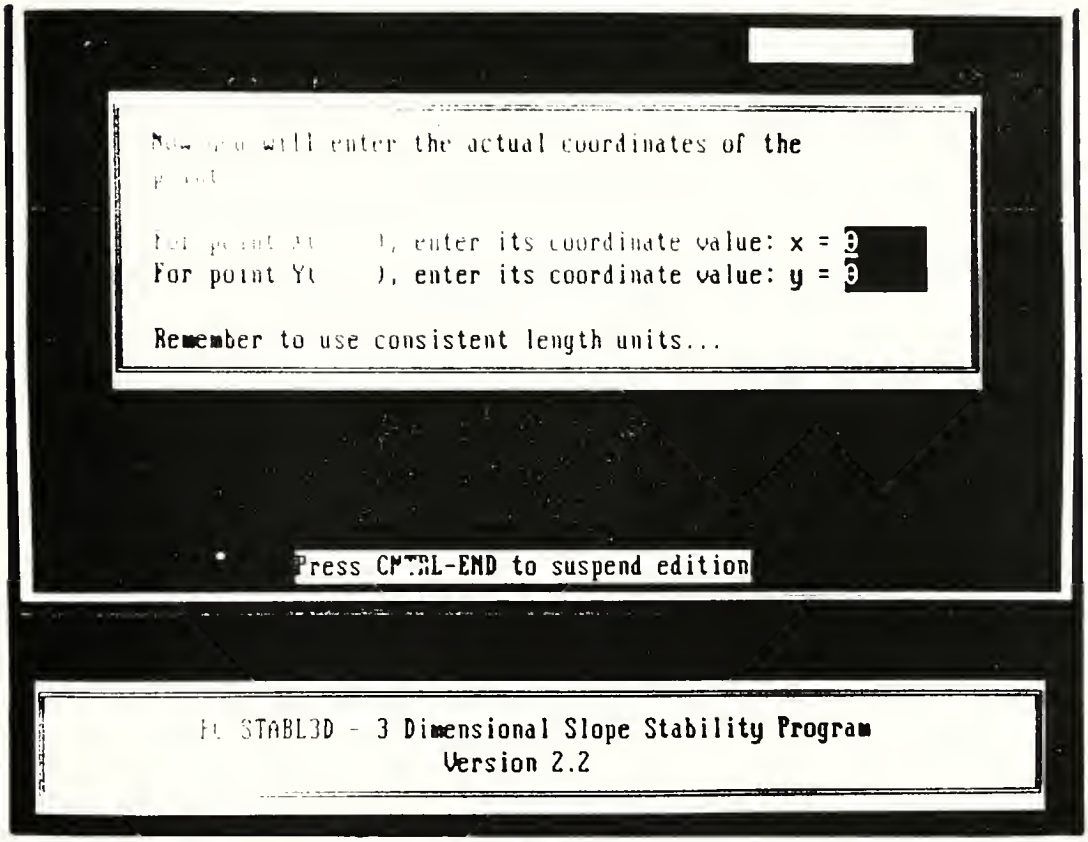

Figure 11 Prompt for the Horizontal Coordinates of Nodes

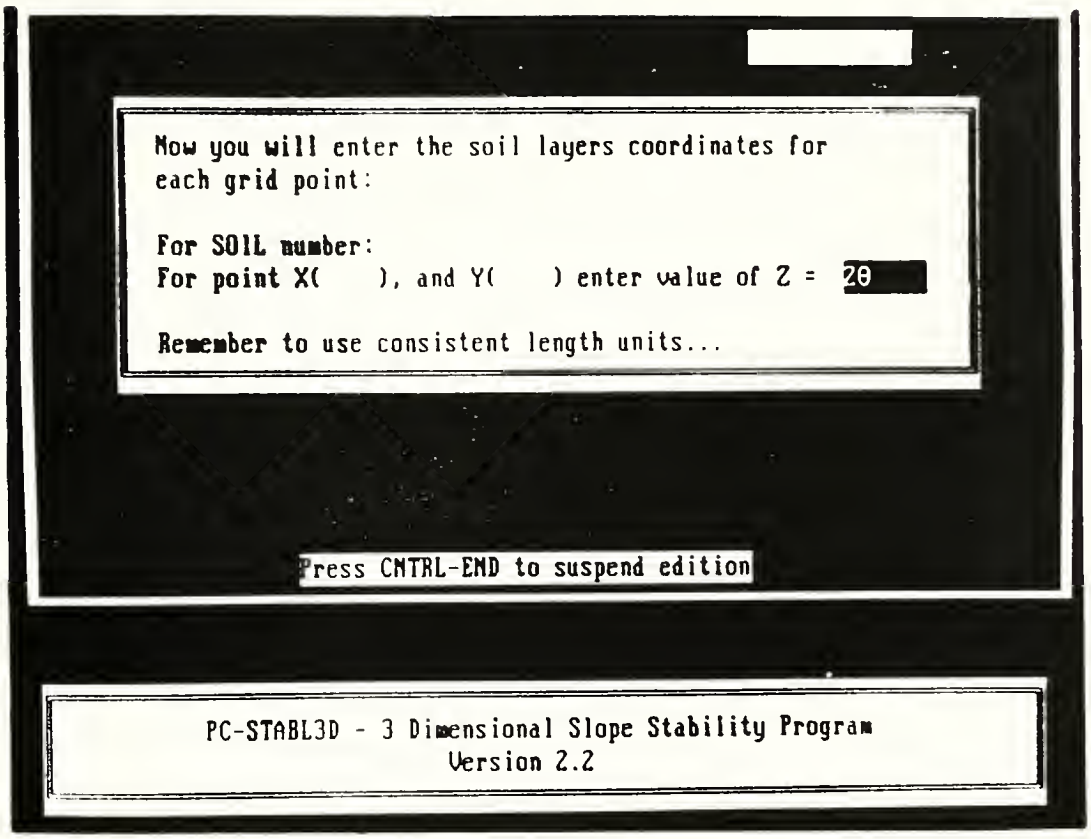

Figure 12 Prompt for the Vertical Coordinates of Nodes

is then reiterated for each soil layer.

The following step is the entering of the failure surface generation constraints. As noted before, a principal axis of sliding should be defined first. Figure 13 shows the window for entering the above data. As can be seen, after the main sliding axis is defined, the computer prompts for the initial and termination values of Y for the main axis, and corresponding initiation and termination intervals. The next window (Figure 14) prompts for initiation values for surface generation in the direction parallel to the Y axis for each subsequent Y axis. These values are entered along with the corresponding surface generation intervals. The last part of the definition of failure surface generation is entering constraints in the vertical direction. As it was noted above, these constraints play a key role in the surface generation and therefore must be defined precisely.

After the failure surface generation limits are entered, the program prompts for the soil properties of the each soil layer (Figure 15). The user must enter unit weight of the soil, strength intercept, and strength shear angle. As mentioned above, the calculations in the program are performed using either total or effective stress approach, hence the appropriate strength parameters must be used for the input. The program does not require usage of any particular set of units; however, all units must be compatible.

The last part of the input procedure is the entering of the ground water data. Figure 16 shows the program prompt for the selection of the pore pressure model. The user will need enter "1" if the pore pressure ratio is

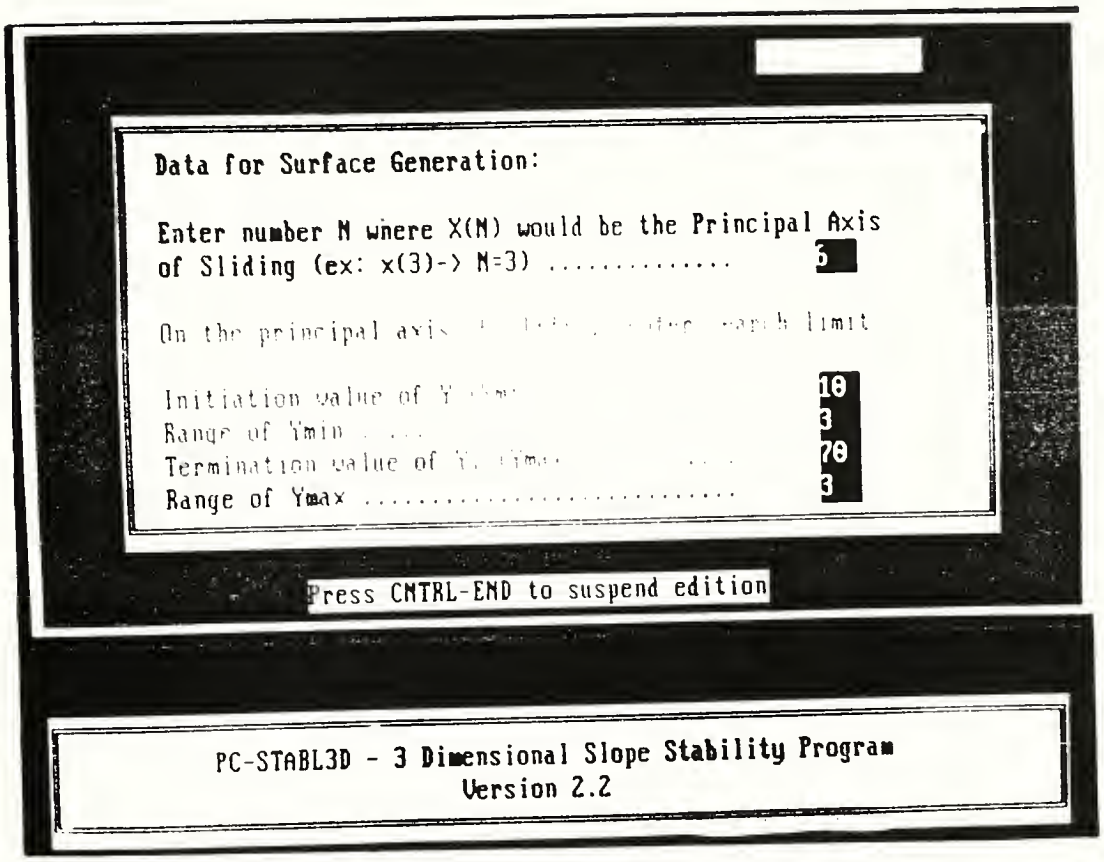

Figure 13 Prompt for the Failure Surface Generation Data

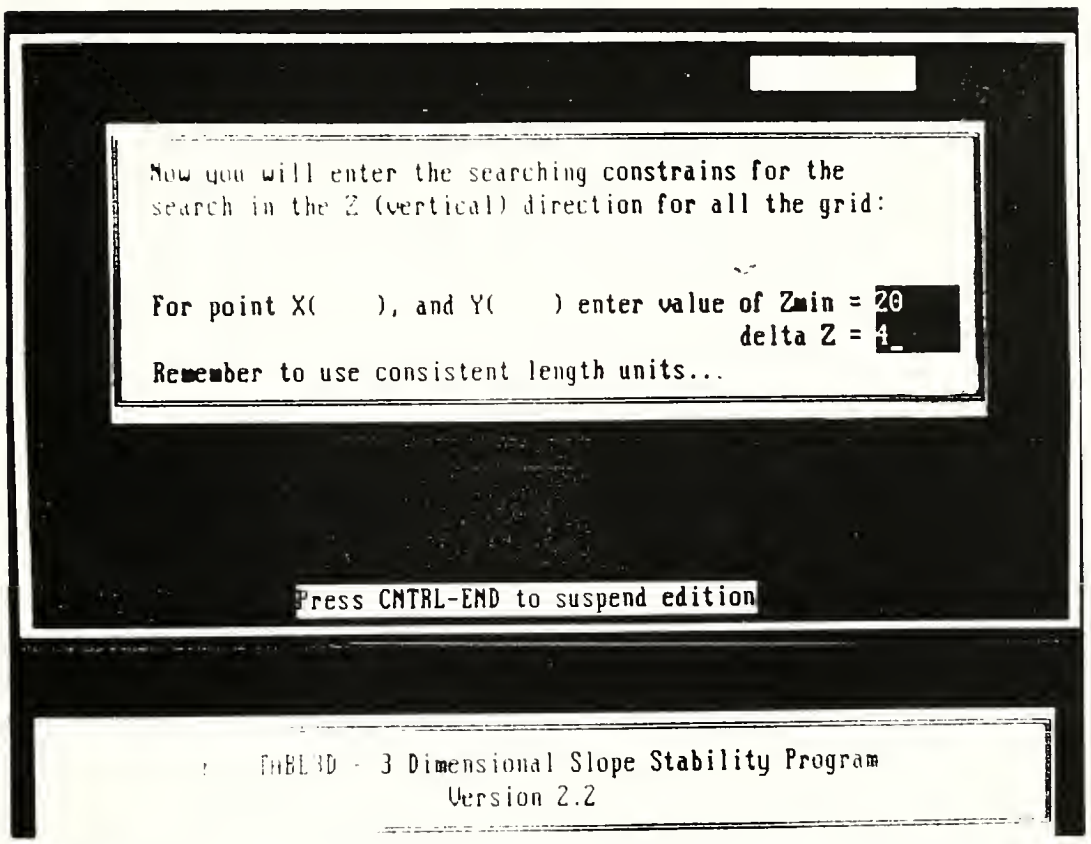

Figure 14 Prompt for the Initiation Values of Surface Generation

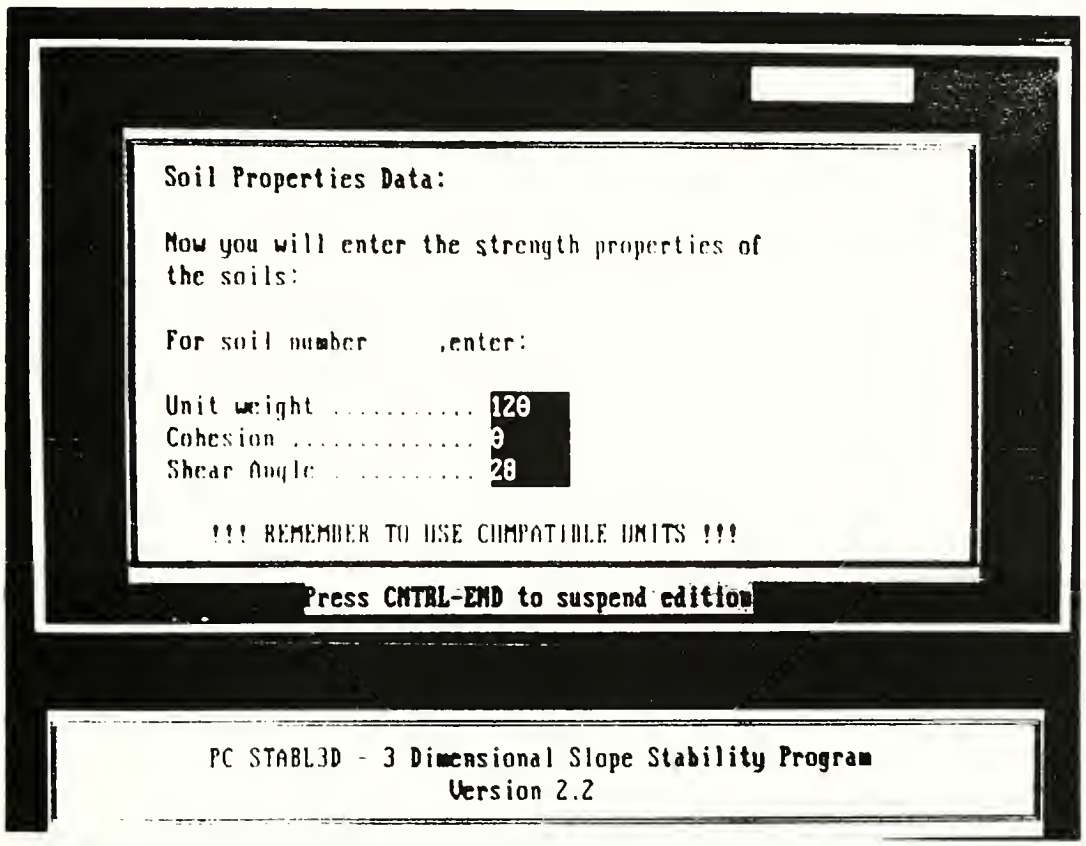

Figure 15 Prompt for the Soil Properties

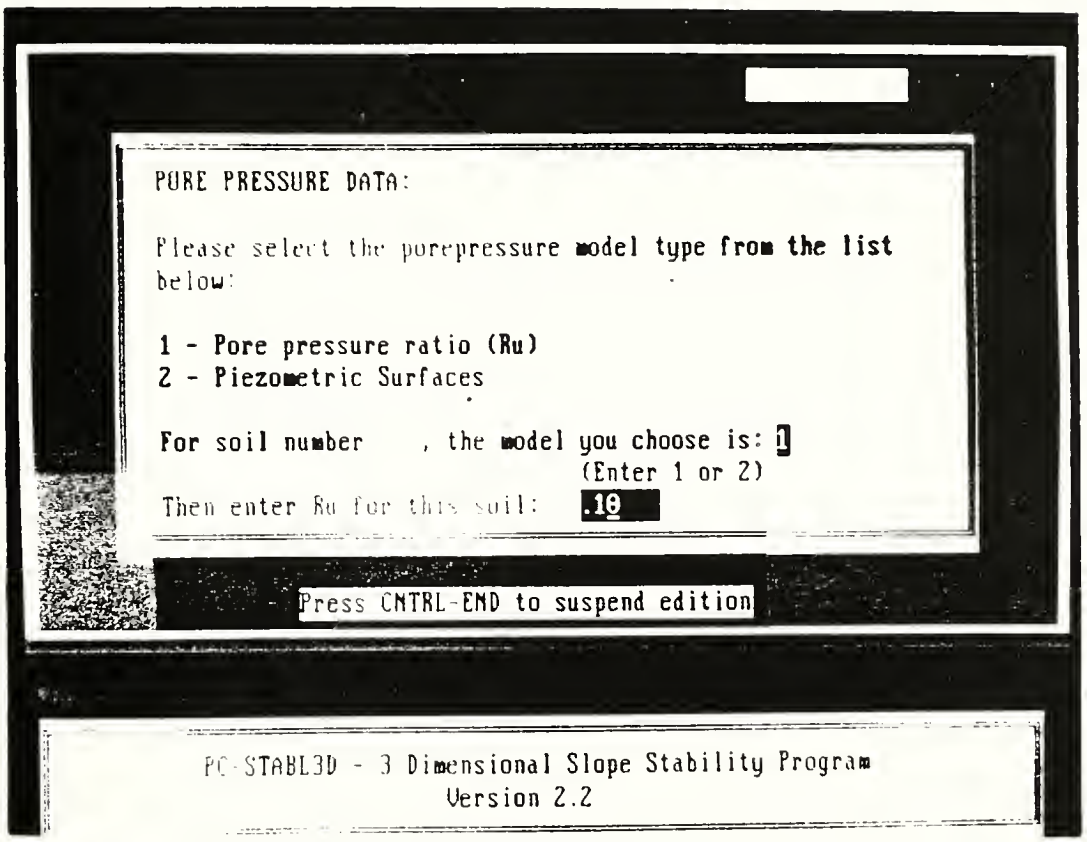

Figure 16 Prompt for the Pore Pressure Model

chosen or "2" if the piezometric surfaces are chosen[1]. If the pore pressure ratio is chosen, the prompt for the value of this ratio will appear, as shown on Figure 16. After this value is entered, the program prompts for the pore pressure model for the following soil layer. If the piezometric surfaces are chosen, the new window will appear (Figure 17) where the user will be asked for the "Z coordinate of the piezometric surface for each node of the defined coordinate mesh. The entering of the ground water data completes creation of the data file.

If errors in the problem geometry are encountered, the user can examine and edit the existing data file using the main menu option "Edit Existing Data File". The operations used to edit the existing data file are the same as those used to create it. The only difference is that the values of parameters will appear in the input fields instead of blanks (or zeros).

When the user finishes creating of the data files, the calculations using PC-STABL3D can be performed. In order to start PC-STABL3D program, the user must highlight the "Run PC-STABL3D" option from the main menu and press "Enter". The pre/postprocessor unloads itself from the computer's memory and loads PC-STABL3D instead. The program will prompt the user for the name of the input data file, output data file, the number of surfaces to be generated and, after the calculations are completed, for the name of the file where the critical surface data are to be written. After the program stops, invoke the pre/postprocessor at the DOS prompt to examine the geometry of the most critical surface.

---

[1] To input a number in the one-character input field, user will need first to delete existing character

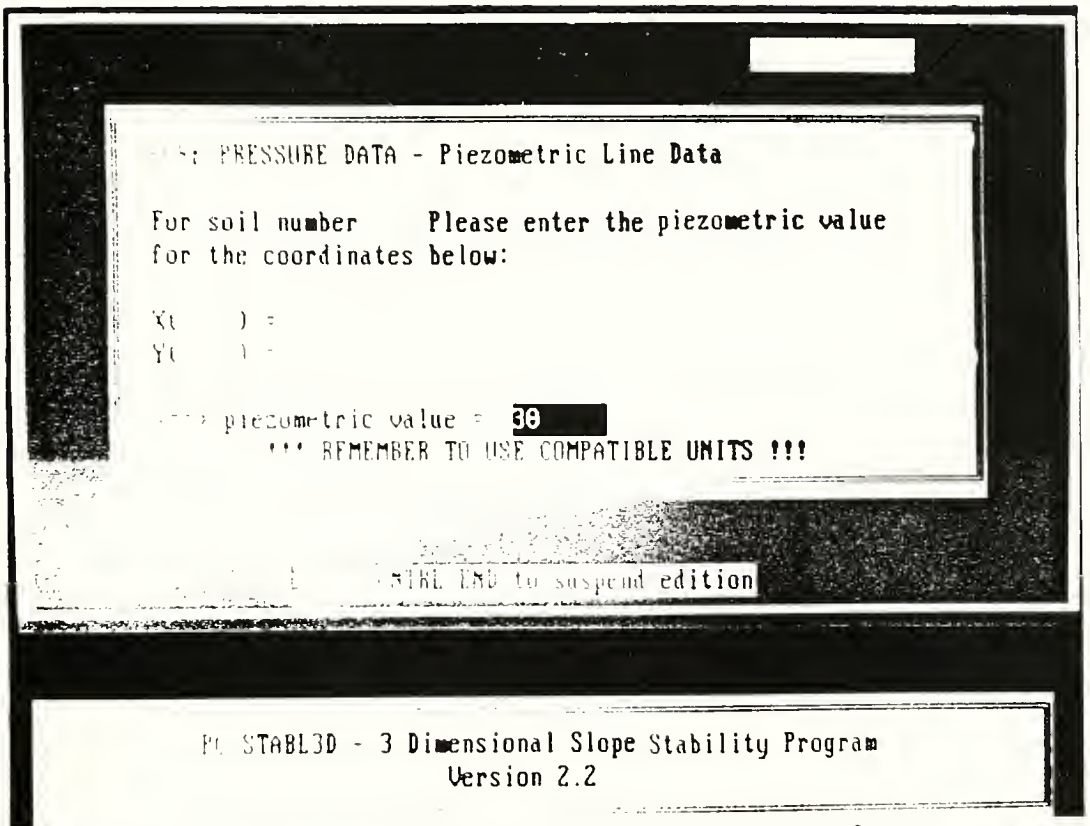

Figure 17 Prompt for the Coordinates of Piezometric Surfaces

5.3 Examining of the Surface Geometry

After the data file is created, the next step in the input data preparation is to check a geometry of the created 3D surface. The pre/postprocessor provides two facilities for representation of the problem geometry: cross section plots, and contour plots. In order to perform plotting functions the input file must be read in first. This can be accomplished by the choosing of the "Read Data File" option from the main menu. The following window with a pop-up file listing (Figure 18) will prompt the user for the name of the desired data file. The user can examine the directory listing in the pop-up window, using "Up" and "Down" arrow keys, or the "Home" key to go to the beginning of the list and the "End" key to go to the end of the list. After the sliding bar is over the desired file, choose it by pressing the "Enter" key. The next window appears (Figure 19) with the prompt for the cross-section number to be plotted, where the user can choose to plot any of the cross section corresponding to the defined X axis. An example of a cross sections is shown on the Figure 20. Besides with the ground surface and soil boundary lines, the program plots surface generation limits (red on the color monitor), which can be used to check the geometry of the problem. It is possible to dump the image on the screen to the printer, if the screen dump program supports EGA or VGA graphics modes.

A similar procedure leads to the plotting of contour lines. The user must first read in the data file and choose the "Plot 3D Geometry" option from the main menu. The program will then ask for the number of the soil layer

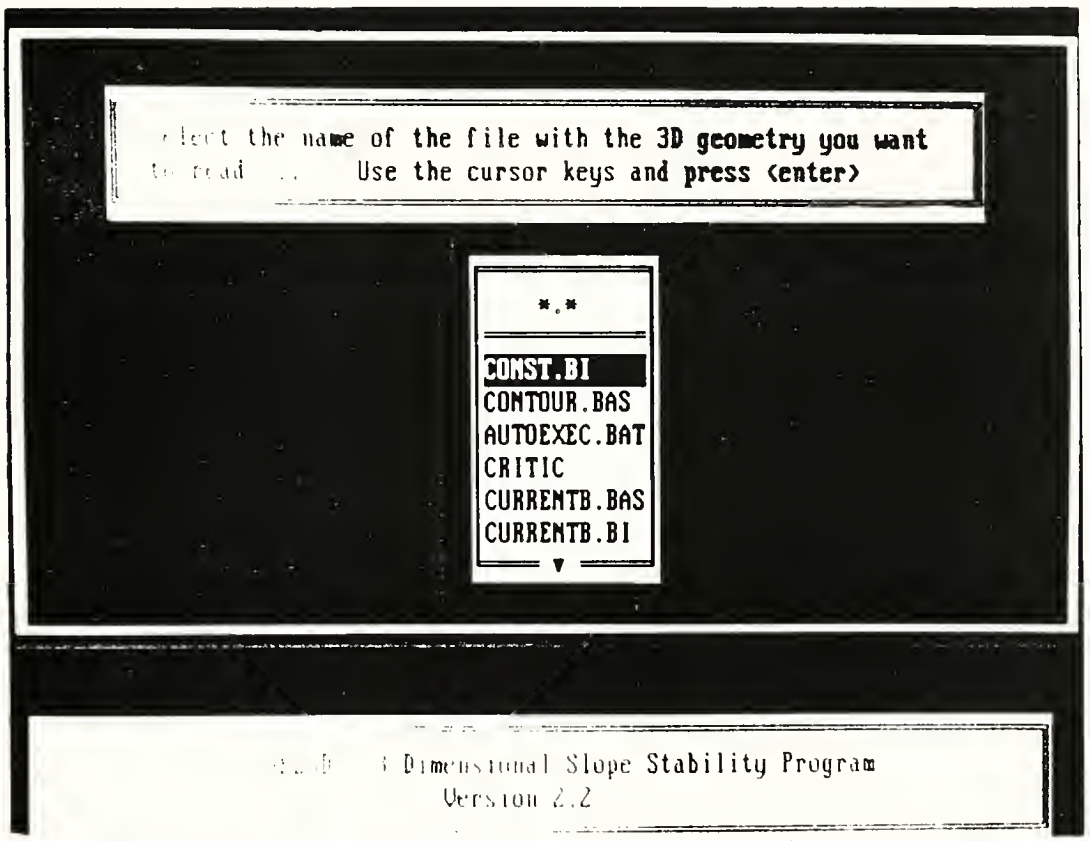

Figure 18 Pop-up File Listing

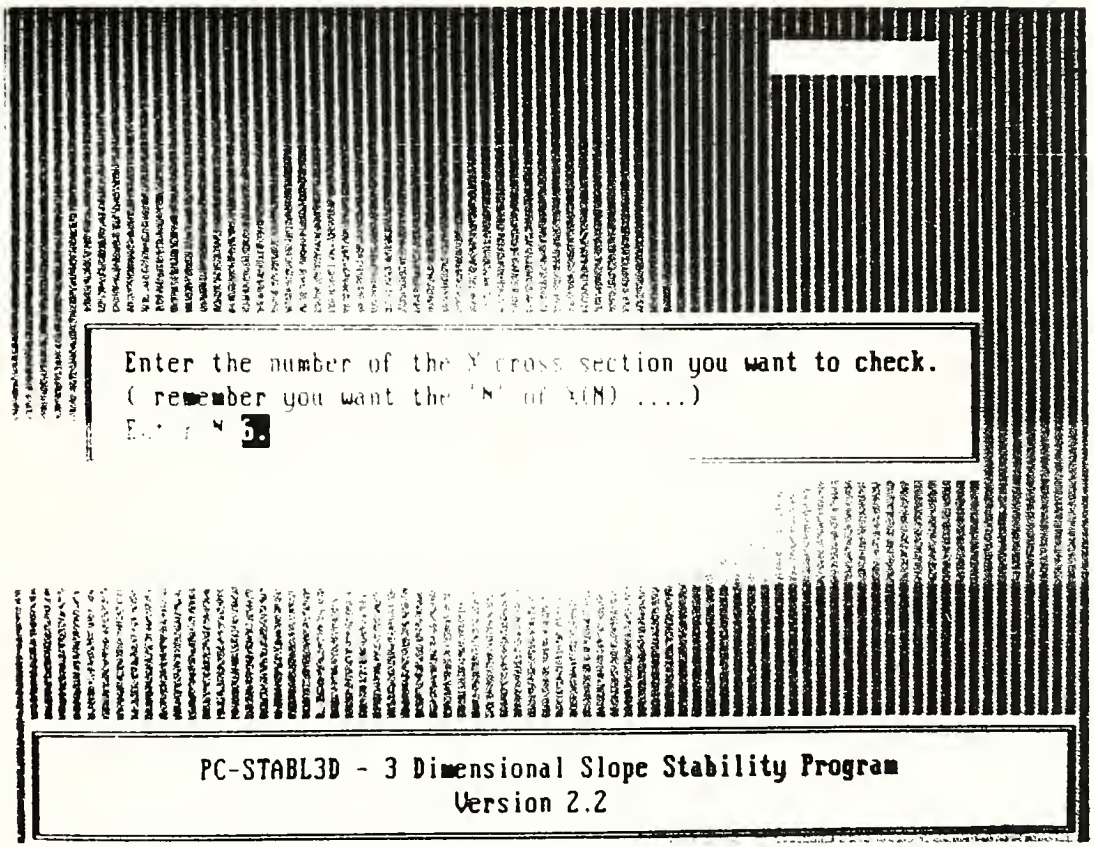

Figure 19 Prompt for the Cross Section Number

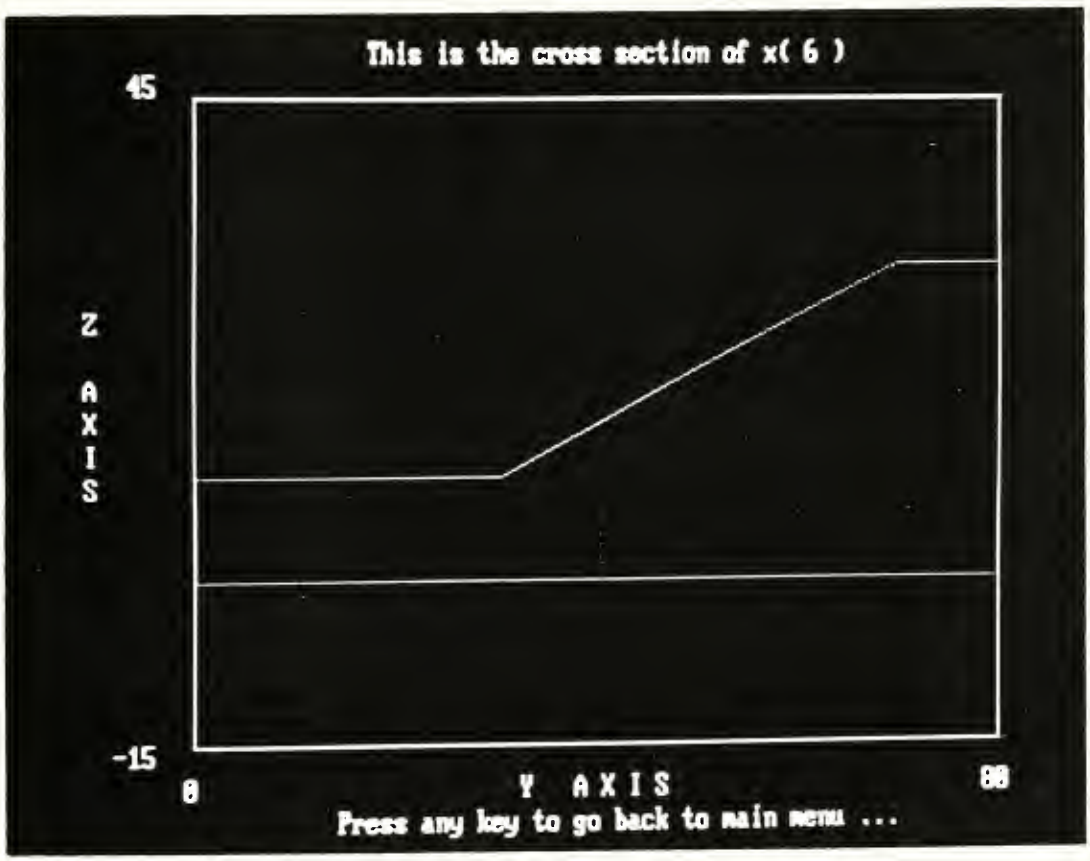

Figure 20 Example of a Cross Section

to be plotted and the number of the contour levels to use. In order to use this option a color monitor is required because the contour lines differ in color, and it is impossible to distinguish among them on the black and white or monochrome screen.

The operations to preview the critical surface geometry are essentially the same as these to preview geometry of the initial profile. To preview the cross sections of the critical surface, the user will need to choose option "Plot 3D Surface Contours" from the main menu. From the pop-up directory window which will appear on the screen, select the file containing critical surface data (this file was generated by PC-STABL3D). The program will read the selected file and prompt for the number of contour levels to be plotted. Input the desired number of contour levels and press "Enter". The plot will appear on the screen (Figure 21). To return to the main menu press any key.

The pre/postprocessor allows plotting cross sections of the most critical failure surface. In order to perform this operation the user must choose the option "Plot Surface Cross Section from the main menu and press "Enter". The pop-up window with the directory listing will appear, and the user will choose the desired file with the most critical surface geometry and press "Enter". The program then will ask for the cross section number to be plotted. After the required number is entered, the plot with the cross section of the most critical failure surface will appear on the screen.

To exit pre/postprocessor user must highlight the "Exit Program" option from the main menu.

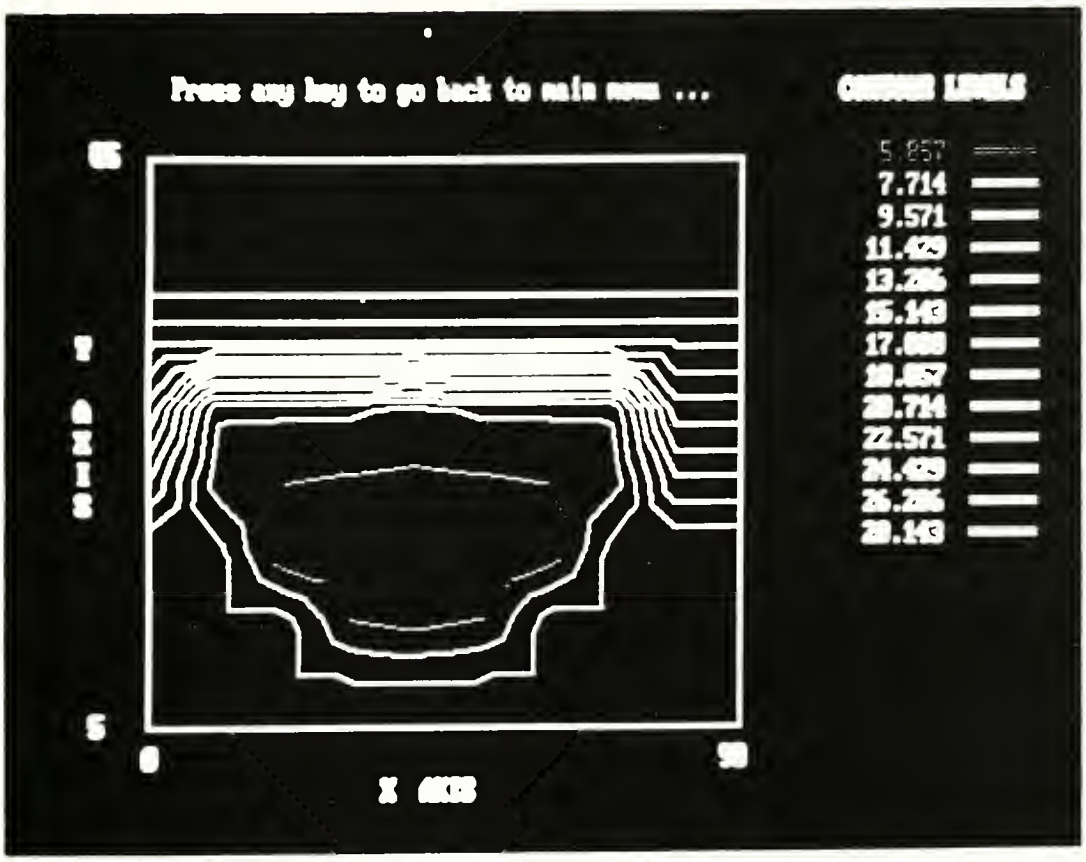

Figure 21 Example of a Contour Plot

6.0 MISCELLANEOUS INFORMATION

6.1 Modification and Revisions of PC-STABL3D

The first version of the program PC-STABL3D and pre/postprocessor was developed in 1986 (Thomaz, 1986). Since that time the program has been used mostly for educational purposes.

The current modification of this program was made by G. Moshkovich. The following modifications were implemented:

1. Data files can be not just created, but also, edited using the enhanced menus of the pre/postprocessor.

2. During the creation and edition of the data files the user can now move forward and backward in the menus while the previous version allowed forward motion only.

3. The system of error messages was included in the preprocessor to enhance the error tracking capabilities of the program.

4. The surface generation routines for the main program were optimized in order to increase their speed and facilitate further modifications.

6.2 Units

All units used for any one problem must be consistent. The printed output is limited to the following units for dimensionning.

Length	(FT)
Unit Weight	(PCF)
Stress	(PSF)
Angles	(DEG)

Metric units or any set of consistent units can be used. It must be kept in mind, however, that the printed output will bear the units listed above. A consistent set of metric units for example would be:

Length	(M)
Unit Weight	(KG/M^3)
Stress	(KG/M^2)
Angles	(DEG)

6.3 Problem Size Limitations

The limitations of the program are defined by the size of the arrays. The arrays of PC-STABL3D were assigned the following dimensions:

Data	Maximum Number[1]
Number of points in X direction	15
Number of points in Y direction	15
Number of soils	5

7.0 Results

The current version of the PC-STABL3D was modified in order to improve interactive interface of the program and enhance mathematical routines for generation of the random surfaces. The modifications made include:

1. Data files can be now not just created, but also, edited using the enhanced menus of the pre/postprocessor.

2. During the creation and edition of the data files the user can now move forward and backward in the menus while the previous version allowed forward motion only.

3. The system of error messages was included in the preprocessor to enhance the error tracking capabilities of the program.

---

[1] The program can be adjusted to handle larger problems by changing dimension statements. The availability of the computer's memory core will take precedence with regard to how large a problem can be ultimately handled.

4. The surface generation routines for the main program were optimized in order to increase their speed and facilitate further modifications.

5. The program performs statistical evaluation of the calculated minimum factor of safety using the Weibull's distribution, and estimates value of minimum statistical factor of safety.

8.0 Conclusions

Based on the results of the research, the following conclusions were made regarding the applicability of the PC-STABL3D to the solution of general three-dimensional slope stability problems.

1. The program can perform three-dimensional stability analysis of slopes if the number of sections along or across the given slope does not exceed 10.

2. The maximum number of soil layers allowed in the program is 5. This and the above limitations are conditions of the availability of the computer memory required for the program.

3. The program performs calculations using the total weight and total boundary force approach. However if the pore pressure is measured or predicted, either a total or an effective stress analysis may be undertaken.

4. The factor of safety calculated using the three-dimensional analysis is generally higher than the one calculated using the planar stress analysis.

REFERENCES

Benjamin, J. R. and Cornell, C. A. (1970), "Probability, Statistics and Decision for Civil Engineers", McGraw Hill, New York

Chen, R. H. (1981) "Three Dimensional Slope Stability Analysis", Report JHRP-81-17, Purdue University, West Lafayette, Indiana.

Meyer, S. L.(1975) "Data Analysis for Scientists and Engineers", John Wiley & Sons, New York

Thomaz J.E. (1986) "A General Method for Three Dimensional Slope Stability Analysis", Report JHRP 86-12, Purdue University, West Lafayette, Indiana.

APPENDICES

APPENDIX A STATISTICAL ANALYSIS

The program provides statistical estimation of the reliability of critical factor of safety. The estimation is needed since the factors of safety generated by the program are based on the analysis of random surfaces. In order to perform this statistical evaluation, the distribution function for the distribution of resulting factors of safety has been defined.

The distribution function for factors of safety satisfies the following conditions:

- It is limited to the left, since the minimum value of the factor of safety is of interest.

- It is open to the right since the maximum factor of safety is indeterminate

- Function, first and second derivatives of the function must be continuous.

The distribution which corresponds to the above conditions is termed extreme value distribution, or also the Weibull's distribution. The probability density function and cumulative distribution function for this distribution are:

$$f_Z = \frac{k}{u-\epsilon}\left(\frac{z-\epsilon}{u-\epsilon}\right)^{k-1} \exp\left[-\left(\frac{z-\epsilon}{u-\epsilon}\right)^{k}\right] \quad z \geq \epsilon \qquad \textbf{(A1)}$$

$$F_Z(z) = 1 - \exp\left[-\left(\frac{z-\epsilon}{u-\epsilon}\right)^k\right] \quad z \geq \epsilon \tag{A2}$$

The moments of this distribution are:

$$m_Z = \epsilon + (u-\epsilon)\Gamma\left(1+\frac{1}{k}\right) \tag{A3}$$

$$\sigma_Z{}^2 = (u-\epsilon)^2\left[\Gamma\left(1+\frac{2}{k}\right) - \Gamma^2\left(1+\frac{1}{k}\right)\right] \tag{A4}$$

$$E[(Z-\epsilon)^l] = (u-\epsilon)^l\Gamma\left(1+\frac{l}{k}\right) \tag{A5}$$

where

$$\Gamma(k) = \int_0^\infty e^{-u}u^{k-1}du \tag{A6}$$

is called the Gamma function.

The first and second moments of the calculated factors of safety can be estimated and, hence, parameters of the distribution can be defined. The program calculates parameter ϵ, which is the left boundary of the distribution or minimum statistical factor of safety. Thus, the user can evaluate how close

the actual minimum factor of safety to the one computed from the Weibull's distribution.

The Weibull's distribution can not evaluate a range of factors of safety until the minimum statistical factor of safety is computed. This is why the statistical factor of safety can have any value, even a negative one. In this case the program will warn the user and suggest that either: the limiting generation boundaries be redefined or the program be run with a larger number of iterations.

The user can use a statistical estimation of the minimum factor of safety to evaluate reliability of the calculated factor of safety. If the statistically estimated factor of safety is considerably less (10%-15%) than the calculated minimum factor of safety, than the variability of the generated surfaces is very high. The best way to decrease variability within the safety factors is to narrow the limits of surface generation. The user may attempt to change both the vertical and horizontal limits of surface generation in order to achieve plausible value for the statistical estimation of minimum factor of safety. The procedure for the search of the most critical failure surface is, of course, trial and error method, and therefore the user's engineering judgment and experience are important factors.

The statistically estimated minimum factor of safety can also help the user to evaluate the reliability of the computed minimum factor of safety for the cases of difficult soil conditions. Such complicating soil conditions can be, for example, weak layers. If the limits of surface generation are assigned such that there is a possibility for the failure surface to pass either through the

stronger soil or through a weak layer, the scatter of the resulting factors of safety will be high. Therefore the difference between the statistically estimated and the computed minimum factors of safety may be considerable. In order to decrease the above difference the user can shift the vertical limits of surface generation up or down to include as much of the weak layer as possible in the generation limits.

The user, however, should exercise caution using the statistically determined minimum factor of safety, since its value can be misleading if the number of generated surfaces is low, and the generation limits are wide.

APPENDIX B EXAMPLES

Example 1

Geometry of the Example 1 is shown on Figure B1. The following soil parameters were used:

Unit weight of soil	100 pcf
Cohesion	500 psf
Friction angle	0 deg

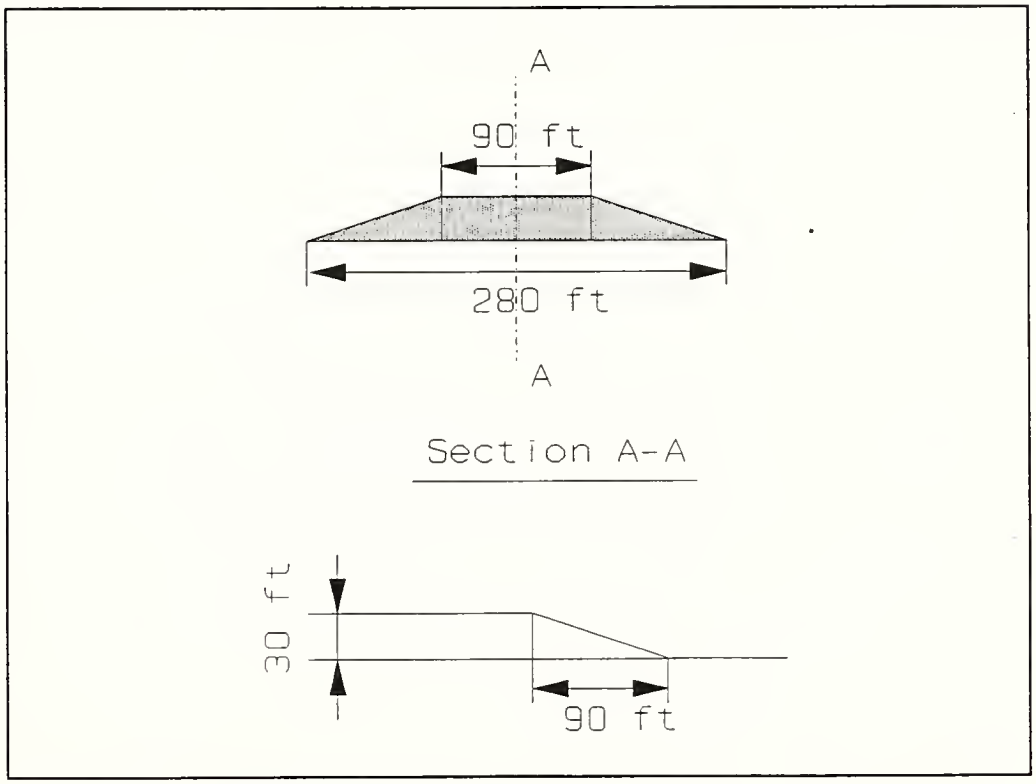

Figure B1 Illustration for Example 1

```
PCSTBL3D Version 2.0
 15          13
 1
 40  60  80  100  120  130  160  180  200  230  240  260  280  300  320
 0  20  40  60  80  100  120  130  140  160  180  200  230
 100  100  100  100  100  100  100  100  100  100  100  100  100
 100  100  100  100  100  100  103.33  106.67  106.67  106.67  106.67  106.67  106.67
 100  100  100  100  100  103.33  110  113.33  113.33  113.33  113.33  113.33  113.33
 100  100  100  100  103.33  110  116.67  120  120  120  120  120  120
 100  100  100  103.33  110  116.67  123.33  126.67  126.67  126.67  126.67  126.67  126.67
 100  100  100  106.67  113.33  120  126.67  130  130  130  130  130  130
 100  100  100  106.67  113.33  120  126.67  130  130  130  130  130  130
 100  100  100  106.67  113.33  120  126.67  130  130  130  130  130  130
 100  100  100  106.67  113.33  120  126.67  130  130  130  130  130  130
 100  100  100  106.67  113.33  120  126.67  130  130  130  130  130  130
 100  100  100  103.33  110  116.67  123.33  126.67  126.67  126.67  126.67  126.67  126.67
 100  100  100  100  103.33  110  116.67  120  120  120  120  120  120
 100  100  100  100  100  103.33  110  113.33  113.33  113.33  113.33  113.33  113.33
 100  100  100  100  100  100  103.33  106.67  106.67  106.67  106.67  106.67  106.67
 100  100  100  100  100  100  100  100  100  100  100  100  100
 8
 20  40  110  60
 120  40  200  40
 120  40  200  40
 120  40  200  40
 100  40  220  40
 100  40  220  40
 100  40  220  40
 100  40  220  40
 100  40  220  40
 100  40  220  40
 120  40  200  40
 120  40  200  40
 120  40  200  40
 120  40  200  40
 79  20  79  20  79  20  79  20  79  20  79  20  79  20  79  20  79  20  79  20  79  20  79  20  79  20
 79  20  79  20  79  20  79  20  79  20  79  20  79  21  79  24  79  24  79  24  79  24  79  24  79  24
 79  20  79  20  79  20  79  20  79  20  79  22  79  25  79  30  79  30  79  30  79  30  79  30  79  30
 79  20  79  20  79  20  79  20  79  22  79  25  79  32  79  35  79  35  79  35  79  35  79  35  79  35
 79  20  79  20  79  20  79  22  79  25  79  30  79  35  79  35  79  35  79  35  79  35  79  35  79  35
 79  20  79  20  79  20  79  25  79  30  79  35  79  40  79  45  79  45  79  45  79  45  79  45  79  45
 79  20  79  20  79  20  79  25  79  30  79  35  79  40  79  45  79  45  79  45  79  45  79  45  79  45
 79  20  79  20  79  20  79  25  79  30  79  35  79  40  79  45  79  45  79  45  79  45  79  45  79  45
 79  20  79  20  79  20  79  25  79  30  79  35  79  40  79  45  79  45  79  45  79  45  79  45  79  45
 79  20  79  20  79  20  79  22  79  25  79  30  79  35  79  35  79  35  79  35  79  35  79  35  79  35
 79  20  79  20  79  20  79  20  79  22  79  25  79  32  79  35  79  35  79  35  79  35  79  35  79  35
 79  20  79  20  79  20  79  20  79  20  79  22  79  25  79  30  79  30  79  30  79  30  79  30  79  30
 79  20  79  20  79  20  79  20  79  20  79  20  79  21  79  24  79  24  79  24  79  24  79  24  79  24
 79  20  79  20  79  20  79  20  79  20  79  20  79  20  79  20  79  20  79  20  79  20  79  20  79  20
 100          500          0
 1
 0
```

OUTPUT FILE

```
**********************************************
*              PC-STABL3D                    *
*  3-DIMENSIOANL SLOPE STABILITY PROGRAM     *
*        FROM PURDUE UNIVERSITY              *
*              VERSION 2.1                   *
**********************************************
```

Number of X coordinates : 15
Number of Y coordinates : 13
Number of soils : 1

X COORDINATES :
coordinate X(1) = 40.00
coordinate X(2) = 60.00
coordinate X(3) = 80.00
coordinate X(4) = 100.00
coordinate X(5) = 120.00
coordinate X(6) = 130.00
coordinate X(7) = 160.00
coordinate X(8) = 180.00
coordinate X(9) = 200.00
coordinate X(10) = 230.00
coordinate X(11) = 240.00
coordinate X(12) = 260.00
coordinate X(13) = 280.00
coordinate X(14) = 300.00
coordinate X(15) = 320.00

Y COORDINATES :
coordinate Y(1) = .00
coordinate Y(2) = 20.00
coordinate Y(3) = 40.00
coordinate Y(4) = 60.00
coordinate Y(5) = 80.00
coordinate Y(6) = 100.00
coordinate Y(7) = 120.00
coordinate Y(8) = 130.00
coordinate Y(9) = 140.00
coordinate Y(10) = 160.00
coordinate Y(11) = 180.00
coordinate Y(12) = 200.00
coordinate Y(13) = 230.00

COORDINATES Z FOR SOIL # 1

Z (1, 1) = 100.00 Z (1, 2) = 100.00 Z (1, 3) = 100.00
Z (1, 4) = 100.00 Z (1, 5) = 100.00 Z (1, 6) = 100.00
Z (1, 7) = 100.00 Z (1, 8) = 100.00 Z (1, 9) = 100.00
Z (1,10) = 100.00 Z (1,11) = 100.00 Z (1,12) = 100.00
Z (1,13) = 100.00 Z (2, 1) = 100.00 Z (2, 2) = 100.00
Z (2, 3) = 100.00 Z (2, 4) = 100.00 Z (2, 5) = 100.00
Z (2, 6) = 100.00 Z (2, 7) = 103.33 Z (2, 8) = 106.67
Z (2, 9) = 106.67 Z (2,10) = 106.67 Z (2,11) = 106.67

Z (2,12) = 106.67 Z (2,13) = 106.67 Z (3, 1) = 100.00
Z (3, 2) = 100.00 Z (3, 3) = 100.00 Z (3, 4) = 100.00
Z (3, 5) = 100.00 Z (3, 6) = 103.33 Z (3, 7) = 110.00
Z (3, 8) = 113.33 Z (3, 9) = 113.33 Z (3,10) = 113.33
Z (3,11) = 113.33 Z (3,12) = 113.33 Z (3,13) = 113.33
Z (4, 1) = 100.00 Z (4, 2) = 100.00 Z (4, 3) = 100.00
Z (4, 4) = 100.00 Z (4, 5) = 103.33 Z (4, 6) = 110.00
Z (4, 7) = 116.67 Z (4, 8) = 120.00 Z (4, 9) = 120.00
Z (4,10) = 120.00 Z (4,11) = 120.00 Z (4,12) = 120.00
Z (4,13) = 120.00 Z (5, 1) = 100.00 Z (5, 2) = 100.00
Z (5, 3) = 100.00 Z (5, 4) = 103.33 Z (5, 5) = 110.00
Z (5, 6) = 116.67 Z (5, 7) = 123.33 Z (5, 8) = 126.67
Z (5, 9) = 126.67 Z (5,10) = 126.67 Z (5,11) = 126.67
Z (5,12) = 126.67 Z (5,13) = 126.67 Z (6, 1) = 100.00
Z (6, 2) = 100.00 Z (6, 3) = 100.00 Z (6, 4) = 106.67
Z (6, 5) = 113.33 Z (6, 6) = 120.00 Z (6, 7) = 126.67
Z (6, 8) = 130.00 Z (6, 9) = 130.00 Z (6,10) = 130.00
Z (6,11) = 130.00 Z (6,12) = 130.00 Z (6,13) = 130.00
Z (7, 1) = 100.00 Z (7, 2) = 100.00 Z (7, 3) = 100.00
Z (7, 4) = 106.67 Z (7, 5) = 113.33 Z (7, 6) = 120.00
Z (7, 7) = 126.67 Z (7, 8) = 130.00 Z (7, 9) = 130.00
Z (7,10) = 130.00 Z (7,11) = 130.00 Z (7,12) = 130.00
Z (7,13) = 130.00 Z (8, 1) = 100.00 Z (8, 2) = 100.00
Z (8, 3) = 100.00 Z (8, 4) = 106.67 Z (8, 5) = 113.33
Z (8, 6) = 120.00 Z (8, 7) = 126.67 Z (8, 8) = 130.00
Z (8, 9) = 130.00 Z (8,10) = 130.00 Z (8,11) = 130.00
Z (8,12) = 130.00 Z (8,13) = 130.00 Z (9, 1) = 100.00
Z (9, 2) = 100.00 Z (9, 3) = 100.00 Z (9, 4) = 106.67
Z (9, 5) = 113.33 Z (9, 6) = 120.00 Z (9, 7) = 126.67
Z (9, 8) = 130.00 Z (9, 9) = 130.00 Z (9,10) = 130.00
Z (9,11) = 130.00 Z (9,12) = 130.00 Z (9,13) = 130.00
Z (10, 1) = 100.00 Z (10, 2) = 100.00 Z (10, 3) = 100.00
Z (10, 4) = 106.67 Z (10, 5) = 113.33 Z (10, 6) = 120.00
Z (10, 7) = 126.67 Z (10, 8) = 130.00 Z (10, 9) = 130.00
Z (10,10) = 130.00 Z (10,11) = 130.00 Z (10,12) = 130.00
Z (10,13) = 130.00 Z (11, 1) = 100.00 Z (11, 2) = 100.00
Z (11, 3) = 100.00 Z (11, 4) = 103.33 Z (11, 5) = 110.00
Z (11, 6) = 116.67 Z (11, 7) = 123.33 Z (11, 8) = 126.67
Z (11, 9) = 126.67 Z (11,10) = 126.67 Z (11,11) = 126.67
Z (11,12) = 126.67 Z (11,13) = 126.67 Z (12, 1) = 100.00
Z (12, 2) = 100.00 Z (12, 3) = 100.00 Z (12, 4) = 100.00
Z (12, 5) = 103.33 Z (12, 6) = 110.00 Z (12, 7) = 116.67
Z (12, 8) = 120.00 Z (12, 9) = 120.00 Z (12,10) = 120.00
Z (12,11) = 120.00 Z (12,12) = 120.00 Z (12,13) = 120.00
Z (13, 1) = 100.00 Z (13, 2) = 100.00 Z (13, 3) = 100.00
Z (13, 4) = 100.00 Z (13, 5) = 100.00 Z (13, 6) = 103.33
Z (13, 7) = 110.00 Z (13, 8) = 113.33 Z (13, 9) = 113.33
Z (13,10) = 113.33 Z (13,11) = 113.33 Z (13,12) = 113.33
Z (13,13) = 113.33 Z (14, 1) = 100.00 Z (14, 2) = 100.00
Z (14, 3) = 100.00 Z (14, 4) = 100.00 Z (14, 5) = 100.00
Z (14, 6) = 100.00 Z (14, 7) = 103.33 Z (14, 8) = 106.67
Z (14, 9) = 106.67 Z (14,10) = 106.67 Z (14,11) = 106.67
Z (14,12) = 106.67 Z (14,13) = 106.67 Z (15, 1) = 100.00
Z (15, 2) = 100.00 Z (15, 3) = 100.00 Z (15, 4) = 100.00
Z (15, 5) = 100.00 Z (15, 6) = 100.00 Z (15, 7) = 100.00
Z (15, 8) = 100.00 Z (15, 9) = 100.00 Z (15,10) = 100.00
Z (15,11) = 100.00 Z (15,12) = 100.00 Z (15,13) = 100.00

BOUNDARIES FOR GENERATION IN THE Y DIRECTION :

Main Axis of Sliding was stablished at X = 180.00

Minimum point for initiation of polygonals at Y = 20.00
Interval for initiation of polygonals is = 40.00
Minimum point for termination of polygonals at Y = 110.00
Interval for termination of polygonals is = 60.00

BOUNDARIES FOR GENERATION IN THE X DIRECTION :

Coordinate Y = .00
Minimum point for initiation of polygonals at X = 120.00
Interval for initiation of polygonals is = 40.00
Minimum point for termination of polygonals at X = 200.00
Interval for termination of polygonals is = 40.00

Coordinate Y = 20.00
Minimum point for initiation of polygonals at X = 120.00
Interval for initiation of polygonals is = 40.00
Minimum point for termination of polygonals at X = 200.00
Interval for termination of polygonals is = 40.00

Coordinate Y = 40.00
Minimum point for initiation of polygonals at X = 120.00
Interval for initiation of polygonals is = 40.00
Minimum point for termination of polygonals at X = 200.00
Interval for termination of polygonals is = 40.00

Coordinate Y = 60.00
Minimum point for initiation of polygonals at X = 100.00
Interval for initiation of polygonals is = 40.00
Minimum point for termination of polygonals at X = 220.00
Interval for termination of polygonals is = 40.00

Coordinate Y = 80.00
Minimum point for initiation of polygonals at X = 100.00
Interval for initiation of polygonals is = 40.00
Minimum point for termination of polygonals at X = 220.00
Interval for termination of polygonals is = 40.00

Coordinate Y = 100.00
Minimum point for initiation of polygonals at X = 100.00
Interval for initiation of polygonals is = 40.00
Minimum point for termination of polygonals at X = 220.00
Interval for termination of polygonals is = 40.00

Coordinate Y = 120.00
Minimum point for initiation of polygonals at X = 100.00

Interval for initiation of polygonals is = 40.00
Minimum point for termination of polygonals at X = 220.00
Interval for termination of polygonals is = 40.00

Coordinate Y = 130.00
Minimum point for initiation of polygonals at X = 100.00
Interval for initiation of polygonals is = 40.00
Minimum point for termination of polygonals at X = 220.00
Interval for termination of polygonals is = 40.00

Coordinate Y = 140.00
Minimum point for initiation of polygonals at X = 100.00
Interval for initiation of polygonals is = 40.00
Minimum point for termination of polygonals at X = 220.00
Interval for termination of polygonals is = 40.00

Coordinate Y = 160.00
Minimum point for initiation of polygonals at X = 120.00
Interval for initiation of polygonals is = 40.00
Minimum point for termination of polygonals at X = 200.00
Interval for termination of polygonals is = 40.00

Coordinate Y = 180.00
Minimum point for initiation of polygonals at X = 120.00
Interval for initiation of polygonals is = 40.00
Minimum point for termination of polygonals at X = 200.00
Interval for termination of polygonals is = 40.00

Coordinate Y = 200.00
Minimum point for initiation of polygonals at X = 120.00
Interval for initiation of polygonals is = 40.00
Minimum point for termination of polygonals at X = 200.00
Interval for termination of polygonals is = 40.00

Coordinate Y = 230.00
Minimum point for initiation of polygonals at X = 120.00
Interval for initiation of polygonals is = 40.00
Minimum point for termination of polygonals at X = 200.00
Interval for termination of polygonals is = 40.00

BOUNDARIES FOR GENERATION IN THE Z DIRECTION :

Zmin(1, 1) = 79.00 Delta Z(1, 1) = 20.00
Zmin(1, 2) = 79.00 Delta Z(1, 2) = 20.00
Zmin(1, 3) = 79.00 Delta Z(1, 3) = 20.00
Zmin(1, 4) = 79.00 Delta Z(1, 4) = 20.00
Zmin(1, 5) = 79.00 Delta Z(1, 5) = 20.00
Zmin(1, 6) = 79.00 Delta Z(1, 6) = 20.00
Zmin(1, 7) = 79.00 Delta Z(1, 7) = 20.00
Zmin(1, 8) = 79.00 Delta Z(1, 8) = 20.00
Zmin(1, 9) = 79.00 Delta Z(1, 9) = 20.00

Zmin(1,10) = 79.00 Delta Z(1,10) = 20.00
Zmin(1,11) = 79.00 Delta Z(1,11) = 20.00
Zmin(1,12) = 79.00 Delta Z(1,12) = 20.00
Zmin(1,13) = 79.00 Delta Z(1,13) = 20.00
Zmin(2, 1) = 79.00 Delta Z(2, 1) = 20.00
Zmin(2, 2) = 79.00 Delta Z(2, 2) = 20.00
Zmin(2, 3) = 79.00 Delta Z(2, 3) = 20.00
Zmin(2, 4) = 79.00 Delta Z(2, 4) = 20.00
Zmin(2, 5) = 79.00 Delta Z(2, 5) = 20.00
Zmin(2, 6) = 79.00 Delta Z(2, 6) = 20.00
Zmin(2, 7) = 79.00 Delta Z(2, 7) = 21.00
Zmin(2, 8) = 79.00 Delta Z(2, 8) = 24.00
Zmin(2, 9) = 79.00 Delta Z(2, 9) = 24.00
Zmin(2,10) = 79.00 Delta Z(2,10) = 24.00
Zmin(2,11) = 79.00 Delta Z(2,11) = 24.00
Zmin(2,12) = 79.00 Delta Z(2,12) = 24.00
Zmin(2,13) = 79.00 Delta Z(2,13) = 24.00
Zmin(3, 1) = 79.00 Delta Z(3, 1) = 20.00
Zmin(3, 2) = 79.00 Delta Z(3, 2) = 20.00
Zmin(3, 3) = 79.00 Delta Z(3, 3) = 20.00
Zmin(3, 4) = 79.00 Delta Z(3, 4) = 20.00
Zmin(3, 5) = 79.00 Delta Z(3, 5) = 20.00
Zmin(3, 6) = 79.00 Delta Z(3, 6) = 22.00
Zmin(3, 7) = 79.00 Delta Z(3, 7) = 25.00
Zmin(3, 8) = 79.00 Delta Z(3, 8) = 30.00
Zmin(3, 9) = 79.00 Delta Z(3, 9) = 30.00
Zmin(3,10) = 79.00 Delta Z(3,10) = 30.00
Zmin(3,11) = 79.00 Delta Z(3,11) = 30.00
Zmin(3,12) = 79.00 Delta Z(3,12) = 30.00
Zmin(3,13) = 79.00 Delta Z(3,13) = 30.00
Zmin(4, 1) = 79.00 Delta Z(4, 1) = 20.00
Zmin(4, 2) = 79.00 Delta Z(4, 2) = 20.00
Zmin(4, 3) = 79.00 Delta Z(4, 3) = 20.00
Zmin(4, 4) = 79.00 Delta Z(4, 4) = 20.00
Zmin(4, 5) = 79.00 Delta Z(4, 5) = 22.00
Zmin(4, 6) = 79.00 Delta Z(4, 6) = 25.00
Zmin(4, 7) = 79.00 Delta Z(4, 7) = 32.00
Zmin(4, 8) = 79.00 Delta Z(4, 8) = 35.00
Zmin(4, 9) = 79.00 Delta Z(4, 9) = 35.00
Zmin(4,10) = 79.00 Delta Z(4,10) = 35.00
Zmin(4,11) = 79.00 Delta Z(4,11) = 35.00
Zmin(4,12) = 79.00 Delta Z(4,12) = 35.00
Zmin(4,13) = 79.00 Delta Z(4,13) = 35.00
Zmin(5, 1) = 79.00 Delta Z(5, 1) = 20.00
Zmin(5, 2) = 79.00 Delta Z(5, 2) = 20.00
Zmin(5, 3) = 79.00 Delta Z(5, 3) = 20.00
Zmin(5, 4) = 79.00 Delta Z(5, 4) = 22.00
Zmin(5, 5) = 79.00 Delta Z(5, 5) = 25.00
Zmin(5, 6) = 79.00 Delta Z(5, 6) = 30.00
Zmin(5, 7) = 79.00 Delta Z(5, 7) = 35.00
Zmin(5, 8) = 79.00 Delta Z(5, 8) = 35.00
Zmin(5, 9) = 79.00 Delta Z(5, 9) = 35.00
Zmin(5,10) = 79.00 Delta Z(5,10) = 35.00
Zmin(5,11) = 79.00 Delta Z(5,11) = 35.00
Zmin(5,12) = 79.00 Delta Z(5,12) = 35.00
Zmin(5,13) = 79.00 Delta Z(5,13) = 35.00
Zmin(6, 1) = 79.00 Delta Z(6, 1) = 20.00
Zmin(6, 2) = 79.00 Delta Z(6, 2) = 20.00

Zmin(6, 3) = 79.00 Delta Z(6, 3) = 20.00
Zmin(6, 4) = 79.00 Delta Z(6, 4) = 25.00
Zmin(6, 5) = 79.00 Delta Z(6, 5) = 30.00
Zmin(6, 6) = 79.00 Delta Z(6, 6) = 35.00
Zmin(6, 7) = 79.00 Delta Z(6, 7) = 40.00
Zmin(6, 8) = 79.00 Delta Z(6, 8) = 45.00
Zmin(6, 9) = 79.00 Delta Z(6, 9) = 45.00
Zmin(6,10) = 79.00 Delta Z(6,10) = 45.00
Zmin(6,11) = 79.00 Delta Z(6,11) = 45.00
Zmin(6,12) = 79.00 Delta Z(6,12) = 45.00
Zmin(6,13) = 79.00 Delta Z(6,13) = 45.00
Zmin(7, 1) = 79.00 Delta Z(7, 1) = 20.00
Zmin(7, 2) = 79.00 Delta Z(7, 2) = 20.00
Zmin(7, 3) = 79.00 Delta Z(7, 3) = 20.00
Zmin(7, 4) = 79.00 Delta Z(7, 4) = 25.00
Zmin(7, 5) = 79.00 Delta Z(7, 5) = 30.00
Zmin(7, 6) = 79.00 Delta Z(7, 6) = 35.00
Zmin(7, 7) = 79.00 Delta Z(7, 7) = 40.00
Zmin(7, 8) = 79.00 Delta Z(7, 8) = 45.00
Zmin(7, 9) = 79.00 Delta Z(7, 9) = 45.00
Zmin(7,10) = 79.00 Delta Z(7,10) = 45.00
Zmin(7,11) = 79.00 Delta Z(7,11) = 45.00
Zmin(7,12) = 79.00 Delta Z(7,12) = 45.00
Zmin(7,13) = 79.00 Delta Z(7,13) = 45.00
Zmin(8, 1) = 79.00 Delta Z(8, 1) = 20.00
Zmin(8, 2) = 79.00 Delta Z(8, 2) = 20.00
Zmin(8, 3) = 79.00 Delta Z(8, 3) = 20.00
Zmin(8, 4) = 79.00 Delta Z(8, 4) = 25.00
Zmin(8, 5) = 79.00 Delta Z(8, 5) = 30.00
Zmin(8, 6) = 79.00 Delta Z(8, 6) = 35.00
Zmin(8, 7) = 79.00 Delta Z(8, 7) = 40.00
Zmin(8, 8) = 79.00 Delta Z(8, 8) = 45.00
Zmin(8, 9) = 79.00 Delta Z(8, 9) = 45.00
Zmin(8,10) = 79.00 Delta Z(8,10) = 45.00
Zmin(8,11) = 79.00 Delta Z(8,11) = 45.00
Zmin(8,12) = 79.00 Delta Z(8,12) = 45.00
Zmin(8,13) = 79.00 Delta Z(8,13) = 45.00
Zmin(9, 1) = 79.00 Delta Z(9, 1) = 20.00
Zmin(9, 2) = 79.00 Delta Z(9, 2) = 20.00
Zmin(9, 3) = 79.00 Delta Z(9, 3) = 20.00
Zmin(9, 4) = 79.00 Delta Z(9, 4) = 25.00
Zmin(9, 5) = 79.00 Delta Z(9, 5) = 30.00
Zmin(9, 6) = 79.00 Delta Z(9, 6) = 35.00
Zmin(9, 7) = 79.00 Delta Z(9, 7) = 40.00
Zmin(9, 8) = 79.00 Delta Z(9, 8) = 45.00
Zmin(9, 9) = 79.00 Delta Z(9, 9) = 45.00
Zmin(9,10) = 79.00 Delta Z(9,10) = 45.00
Zmin(9,11) = 79.00 Delta Z(9,11) = 45.00
Zmin(9,12) = 79.00 Delta Z(9,12) = 45.00
Zmin(9,13) = 79.00 Delta Z(9,13) = 45.00
Zmin(10, 1) = 79.00 Delta Z(10, 1) = 20.00
Zmin(10, 2) = 79.00 Delta Z(10, 2) = 20.00
Zmin(10, 3) = 79.00 Delta Z(10, 3) = 20.00
Zmin(10, 4) = 79.00 Delta Z(10, 4) = 25.00
Zmin(10, 5) = 79.00 Delta Z(10, 5) = 30.00
Zmin(10, 6) = 79.00 Delta Z(10, 6) = 35.00
Zmin(10, 7) = 79.00 Delta Z(10, 7) = 40.00
Zmin(10, 8) = 79.00 Delta Z(10, 8) = 45.00

Zmin(10, 9) = 79.00 Delta Z(10, 9) = 45.00
Zmin(10,10) = 79.00 Delta Z(10,10) = 45.00
Zmin(10,11) = 79.00 Delta Z(10,11) = 45.00
Zmin(10,12) = 79.00 Delta Z(10,12) = 45.00
Zmin(10,13) = 79.00 Delta Z(10,13) = 45.00
Zmin(11, 1) = 79.00 Delta Z(11, 1) = 20.00
Zmin(11, 2) = 79.00 Delta Z(11, 2) = 20.00
Zmin(11, 3) = 79.00 Delta Z(11, 3) = 20.00
Zmin(11, 4) = 79.00 Delta Z(11, 4) = 22.00
Zmin(11, 5) = 79.00 Delta Z(11, 5) = 25.00
Zmin(11, 6) = 79.00 Delta Z(11, 6) = 30.00
Zmin(11, 7) = 79.00 Delta Z(11, 7) = 35.00
Zmin(11, 8) = 79.00 Delta Z(11, 8) = 35.00
Zmin(11, 9) = 79.00 Delta Z(11, 9) = 35.00
Zmin(11,10) = 79.00 Delta Z(11,10) = 35.00
Zmin(11,11) = 79.00 Delta Z(11,11) = 35.00
Zmin(11,12) = 79.00 Delta Z(11,12) = 35.00
Zmin(11,13) = 79.00 Delta Z(11,13) = 35.00
Zmin(12, 1) = 79.00 Delta Z(12, 1) = 20.00
Zmin(12, 2) = 79.00 Delta Z(12, 2) = 20.00
Zmin(12, 3) = 79.00 Delta Z(12, 3) = 20.00
Zmin(12, 4) = 79.00 Delta Z(12, 4) = 20.00
Zmin(12, 5) = 79.00 Delta Z(12, 5) = 22.00
Zmin(12, 6) = 79.00 Delta Z(12, 6) = 25.00
Zmin(12, 7) = 79.00 Delta Z(12, 7) = 32.00
Zmin(12, 8) = 79.00 Delta Z(12, 8) = 35.00
Zmin(12, 9) = 79.00 Delta Z(12, 9) = 35.00
Zmin(12,10) = 79.00 Delta Z(12,10) = 35.00
Zmin(12,11) = 79.00 Delta Z(12,11) = 35.00
Zmin(12,12) = 79.00 Delta Z(12,12) = 35.00
Zmin(12,13) = 79.00 Delta Z(12,13) = 35.00
Zmin(13, 1) = 79.00 Delta Z(13, 1) = 20.00
Zmin(13, 2) = 79.00 Delta Z(13, 2) = 20.00
Zmin(13, 3) = 79.00 Delta Z(13, 3) = 20.00
Zmin(13, 4) = 79.00 Delta Z(13, 4) = 20.00
Zmin(13, 5) = 79.00 Delta Z(13, 5) = 20.00
Zmin(13, 6) = 79.00 Delta Z(13, 6) = 22.00
Zmin(13, 7) = 79.00 Delta Z(13, 7) = 25.00
Zmin(13, 8) = 79.00 Delta Z(13, 8) = 30.00
Zmin(13, 9) = 79.00 Delta Z(13, 9) = 30.00
Zmin(13,10) = 79.00 Delta Z(13,10) = 30.00
Zmin(13,11) = 79.00 Delta Z(13,11) = 30.00
Zmin(13,12) = 79.00 Delta Z(13,12) = 30.00
Zmin(13,13) = 79.00 Delta Z(13,13) = 30.00
Zmin(14, 1) = 79.00 Delta Z(14, 1) = 20.00
Zmin(14, 2) = 79.00 Delta Z(14, 2) = 20.00
Zmin(14, 3) = 79.00 Delta Z(14, 3) = 20.00
Zmin(14, 4) = 79.00 Delta Z(14, 4) = 20.00
Zmin(14, 5) = 79.00 Delta Z(14, 5) = 20.00
Zmin(14, 6) = 79.00 Delta Z(14, 6) = 20.00
Zmin(14, 7) = 79.00 Delta Z(14, 7) = 21.00
Zmin(14, 8) = 79.00 Delta Z(14, 8) = 24.00
Zmin(14, 9) = 79.00 Delta Z(14, 9) = 24.00
Zmin(14,10) = 79.00 Delta Z(14,10) = 24.00
Zmin(14,11) = 79.00 Delta Z(14,11) = 24.00
Zmin(14,12) = 79.00 Delta Z(14,12) = 24.00
Zmin(14,13) = 79.00 Delta Z(14,13) = 24.00
Zmin(15, 1) = 79.00 Delta Z(15, 1) = 20.00

Zmin(15, 2) = 79.00 Delta Z(15, 2) = 20.00
Zmin(15, 3) = 79.00 Delta Z(15, 3) = 20.00
Zmin(15, 4) = 79.00 Delta Z(15, 4) = 20.00
Zmin(15, 5) = 79.00 Delta Z(15, 5) = 20.00
Zmin(15, 6) = 79.00 Delta Z(15, 6) = 20.00
Zmin(15, 7) = 79.00 Delta Z(15, 7) = 20.00
Zmin(15, 8) = 79.00 Delta Z(15, 8) = 20.00
Zmin(15, 9) = 79.00 Delta Z(15, 9) = 20.00
Zmin(15,10) = 79.00 Delta Z(15,10) = 20.00
Zmin(15,11) = 79.00 Delta Z(15,11) = 20.00
Zmin(15,12) = 79.00 Delta Z(15,12) = 20.00
Zmin(15,13) = 79.00 Delta Z(15,13) = 20.00

SOIL PROPERTIES :

Soil	Unit Weight	Cohesion	Shear Angle
1	100.00	500.0	.0

Ru of soil # 1 = .00

TEN MOST CRITICAL SURFACES :

SURFACE # 1

Coordinate X	Coordinate Y	Coordinate Z
180.000	41.947	.000
154.579	60.000	386.448
160.000	60.000	90.326
180.000	60.000	90.293
200.000	60.000	90.326
205.421	60.000	513.552
137.294	80.000	343.236
160.000	80.000	92.027
180.000	80.000	91.997
200.000	80.000	92.027
222.706	80.000	556.764
120.010	100.000	300.024
130.000	100.000	101.952
160.000	100.000	83.505
180.000	100.000	82.124
200.000	100.000	83.505
230.000	100.000	101.952
239.990	100.000	599.976
112.534	120.000	281.335
120.000	120.000	104.000
130.000	120.000	96.747
160.000	120.000	86.576
180.000	120.000	86.295
200.000	120.000	86.576
230.000	120.000	96.747
240.000	120.000	104.000
247.466	120.000	618.665

114.857	130.000	287.141
120.000	130.000	107.689
130.000	130.000	105.583
160.000	130.000	99.710
180.000	130.000	97.431
200.000	130.000	99.710
230.000	130.000	105.583
240.000	130.000	107.689
245.143	130.000	612.859
129.358	140.000	323.394
130.000	140.000	117.225
160.000	140.000	116.657
180.000	140.000	116.475
200.000	140.000	116.657
230.000	140.000	117.225
230.642	140.000	576.606
140.000	160.000	350.000
160.000	160.000	124.000
180.000	160.000	124.000
200.000	160.000	124.000
220.000	160.000	550.000
180.000	161.869	.000

Factor of Safety = 1.662

SURFACE # 2

Coordinate X	Coordinate Y	Coordinate Z
180.000	22.640	.000
137.565	40.000	343.912
160.000	40.000	85.030
180.000	40.000	83.057
200.000	40.000	85.030
222.435	40.000	556.088
124.614	60.000	311.536
130.000	60.000	89.673
160.000	60.000	81.507
180.000	60.000	79.000
200.000	60.000	81.507
230.000	60.000	89.673
235.386	60.000	588.464
111.664	80.000	279.159
120.000	80.000	101.000
130.000	80.000	104.000
160.000	80.000	94.851
180.000	80.000	91.949
200.000	80.000	94.851
230.000	80.000	104.000
240.000	80.000	101.000
248.336	80.000	620.841
109.278	100.000	273.194
120.000	100.000	104.000
130.000	100.000	109.000
160.000	100.000	109.000
180.000	100.000	109.000
200.000	100.000	109.000

230.000	100.000	109.000
240.000	100.000	104.000
250.722	100.000	626.806
119.644	120.000	299.110
120.000	120.000	109.000
130.000	120.000	114.000
160.000	120.000	114.000
180.000	120.000	114.000
200.000	120.000	114.000
230.000	120.000	114.000
240.000	120.000	109.000
240.356	120.000	600.890
127.635	130.000	319.087
130.000	130.000	119.000
160.000	130.000	119.000
180.000	130.000	119.000
200.000	130.000	119.000
230.000	130.000	119.000
232.365	130.000	580.913
180.000	136.347	.000

Factor of Safety = 3.263

SURFACE # 3

Coordinate X	Coordinate Y	Coordinate Z
180.000	22.640	.000
137.565	40.000	343.912
160.000	40.000	85.030
180.000	40.000	83.057
200.000	40.000	85.030
222.435	40.000	556.088
124.614	60.000	311.536
130.000	60.000	89.673
160.000	60.000	81.507
180.000	60.000	79.000
200.000	60.000	81.507
230.000	60.000	89.673
235.386	60.000	588.464
111.664	80.000	279.159
120.000	80.000	101.000
130.000	80.000	104.000
160.000	80.000	94.851
180.000	80.000	91.949
200.000	80.000	94.851
230.000	80.000	104.000
240.000	80.000	101.000
248.336	80.000	620.841
109.278	100.000	273.194
120.000	100.000	104.000
130.000	100.000	109.000
160.000	100.000	109.000
180.000	100.000	109.000
200.000	100.000	109.000
230.000	100.000	109.000
240.000	100.000	104.000

250.722	100.000	626.806
119.644	120.000	299.110
120.000	120.000	109.000
130.000	120.000	114.000
160.000	120.000	114.000
180.000	120.000	114.000
200.000	120.000	114.000
230.000	120.000	114.000
240.000	120.000	109.000
240.356	120.000	600.890
127.635	130.000	319.087
130.000	130.000	119.000
160.000	130.000	119.000
180.000	130.000	119.000
200.000	130.000	119.000
230.000	130.000	119.000
232.365	130.000	580.913
180.000	136.347	.000

Factor of Safety = 3.263

SURFACE # 4

Coordinate X	Coordinate Y	Coordinate Z
180.000	22.640	.000
137.565	40.000	343.912
160.000	40.000	85.030
180.000	40.000	83.057
200.000	40.000	85.030
222.435	40.000	556.088
124.614	60.000	311.536
130.000	60.000	89.673
160.000	60.000	81.507
180.000	60.000	79.000
200.000	60.000	81.507
230.000	60.000	89.673
235.386	60.000	588.464
111.664	80.000	279.159
120.000	80.000	101.000
130.000	80.000	104.000
160.000	80.000	94.851
180.000	80.000	91.949
200.000	80.000	94.851
230.000	80.000	104.000
240.000	80.000	101.000
248.336	80.000	620.841
109.278	100.000	273.194
120.000	100.000	104.000
130.000	100.000	109.000
160.000	100.000	109.000
180.000	100.000	109.000
200.000	100.000	109.000
230.000	100.000	109.000
240.000	100.000	104.000
250.722	100.000	626.806
119.644	120.000	299.110

120.000	120.000	109.000
130.000	120.000	114.000
160.000	120.000	114.000
180.000	120.000	114.000
200.000	120.000	114.000
230.000	120.000	114.000
240.000	120.000	109.000
240.356	120.000	600.890
127.635	130.000	319.087
130.000	130.000	119.000
160.000	130.000	119.000
180.000	130.000	119.000
200.000	130.000	119.000
230.000	130.000	119.000
232.365	130.000	580.913
180.000	136.347	.000

Factor of Safety = 3.263

SURFACE # 5

Coordinate X	Coordinate Y	Coordinate Z
180.000	22.640	.000
137.565	40.000	343.912
160.000	40.000	85.030
180.000	40.000	83.057
200.000	40.000	85.030
222.435	40.000	556.088
124.614	60.000	311.536
130.000	60.000	89.673
160.000	60.000	81.507
180.000	60.000	79.000
200.000	60.000	81.507
230.000	60.000	89.673
235.386	60.000	588.464
111.664	80.000	279.159
120.000	80.000	101.000
130.000	80.000	104.000
160.000	80.000	94.851
180.000	80.000	91.949
200.000	80.000	94.851
230.000	80.000	104.000
240.000	80.000	101.000
248.336	80.000	620.841
109.278	100.000	273.194
120.000	100.000	104.000
130.000	100.000	109.000
160.000	100.000	109.000
180.000	100.000	109.000
200.000	100.000	109.000
230.000	100.000	109.000
240.000	100.000	104.000
250.722	100.000	626.806
119.644	120.000	299.110
120.000	120.000	109.000
130.000	120.000	114.000

160.000	120.000	114.000
180.000	120.000	114.000
200.000	120.000	114.000
230.000	120.000	114.000
240.000	120.000	109.000
240.356	120.000	600.890
127.635	130.000	319.087
130.000	130.000	119.000
160.000	130.000	119.000
180.000	130.000	119.000
200.000	130.000	119.000
230.000	130.000	119.000
232.365	130.000	580.913
180.000	136.347	.000

Factor of Safety = 3.263

SURFACE # 6

Coordinate X	Coordinate Y	Coordinate Z
180.000	22.640	.000
137.565	40.000	343.912
160.000	40.000	85.030
180.000	40.000	83.057
200.000	40.000	85.030
222.435	40.000	556.088
124.614	60.000	311.536
130.000	60.000	89.673
160.000	60.000	81.507
180.000	60.000	79.000
200.000	60.000	81.507
230.000	60.000	89.673
235.386	60.000	588.464
111.664	80.000	279.159
120.000	80.000	101.000
130.000	80.000	104.000
160.000	80.000	94.851
180.000	80.000	91.949
200.000	80.000	94.851
230.000	80.000	104.000
240.000	80.000	101.000
248.336	80.000	620.841
109.278	100.000	273.194
120.000	100.000	104.000
130.000	100.000	109.000
160.000	100.000	109.000
180.000	100.000	109.000
200.000	100.000	109.000
230.000	100.000	109.000
240.000	100.000	104.000
250.722	100.000	626.806
119.644	120.000	299.110
120.000	120.000	109.000
130.000	120.000	114.000
160.000	120.000	114.000
180.000	120.000	114.000

200.000	120.000	114.000
230.000	120.000	114.000
240.000	120.000	109.000
240.356	120.000	600.890
127.635	130.000	319.087
130.000	130.000	119.000
160.000	130.000	119.000
180.000	130.000	119.000
200.000	130.000	119.000
230.000	130.000	119.000
232.365	130.000	580.913
180.000	136.347	.000

Factor of Safety = 3.263

SURFACE # 7

Coordinate X	Coordinate Y	Coordinate Z
180.000	22.640	.000
137.565	40.000	343.912
160.000	40.000	85.030
180.000	40.000	83.057
200.000	40.000	85.030
222.435	40.000	556.088
124.614	60.000	311.536
130.000	60.000	89.673
160.000	60.000	81.507
180.000	60.000	79.000
200.000	60.000	81.507
230.000	60.000	89.673
235.386	60.000	588.464
111.664	80.000	279.159
120.000	80.000	101.000
130.000	80.000	104.000
160.000	80.000	94.851
180.000	80.000	91.949
200.000	80.000	94.851
230.000	80.000	104.000
240.000	80.000	101.000
248.336	80.000	620.841
109.278	100.000	273.194
120.000	100.000	104.000
130.000	100.000	109.000
160.000	100.000	109.000
180.000	100.000	109.000
200.000	100.000	109.000
230.000	100.000	109.000
240.000	100.000	104.000
250.722	100.000	626.806
119.644	120.000	299.110
120.000	120.000	109.000
130.000	120.000	114.000
160.000	120.000	114.000
180.000	120.000	114.000
200.000	120.000	114.000
230.000	120.000	114.000

240.000	120.000	109.000
240.356	120.000	600.890
127.635	130.000	319.087
130.000	130.000	119.000
160.000	130.000	119.000
180.000	130.000	119.000
200.000	130.000	119.000
230.000	130.000	119.000
232.365	130.000	580.913
180.000	136.347	.000

Factor of Safety = 3.263

SURFACE # 8

Coordinate X	Coordinate Y	Coordinate Z
180.000	46.742	.000
153.769	60.000	384.422
160.000	60.000	94.802
180.000	60.000	91.850
200.000	60.000	94.802
206.231	60.000	515.578
125.274	80.000	313.185
130.000	80.000	90.641
160.000	80.000	83.934
180.000	80.000	83.876
200.000	80.000	83.934
230.000	80.000	90.641
234.726	80.000	586.815
117.769	100.000	294.422
120.000	100.000	101.000
130.000	100.000	101.471
160.000	100.000	88.691
180.000	100.000	87.211
200.000	100.000	88.691
230.000	100.000	101.471
240.000	100.000	101.000
242.231	100.000	605.578
118.093	120.000	295.233
120.000	120.000	104.000
130.000	120.000	107.775
160.000	120.000	103.387
180.000	120.000	103.381
200.000	120.000	103.387
230.000	120.000	107.775
240.000	120.000	104.000
241.907	120.000	604.767
119.407	130.000	298.518
120.000	130.000	109.000
130.000	130.000	114.000
160.000	130.000	114.000
180.000	130.000	111.598
200.000	130.000	114.000
230.000	130.000	114.000
240.000	130.000	109.000
240.593	130.000	601.482

129.127	140.000	322.818
130.000	140.000	119.000
160.000	140.000	119.000
180.000	140.000	119.000
200.000	140.000	119.000
230.000	140.000	119.000
230.873	140.000	577.182
140.000	160.000	350.000
160.000	160.000	124.000
180.000	160.000	124.000
200.000	160.000	124.000
220.000	160.000	550.000
180.000	160.653	.000

Factor of Safety = 4.117

SURFACE # 9

Coordinate X	Coordinate Y	Coordinate Z
180.000	46.742	.000
153.769	60.000	384.422
160.000	60.000	94.802
180.000	60.000	91.850
200.000	60.000	94.802
206.231	60.000	515.578
125.274	80.000	313.185
130.000	80.000	90.641
160.000	80.000	83.934
180.000	80.000	83.876
200.000	80.000	83.934
230.000	80.000	90.641
234.726	80.000	586.815
117.769	100.000	294.422
120.000	100.000	101.000
130.000	100.000	101.471
160.000	100.000	88.691
180.000	100.000	87.211
200.000	100.000	88.691
230.000	100.000	101.471
240.000	100.000	101.000
242.231	100.000	605.578
118.093	120.000	295.233
120.000	120.000	104.000
130.000	120.000	107.775
160.000	120.000	103.387
180.000	120.000	103.381
200.000	120.000	103.387
230.000	120.000	107.775
240.000	120.000	104.000
241.907	120.000	604.767
119.407	130.000	298.518
120.000	130.000	109.000
130.000	130.000	114.000
160.000	130.000	114.000
180.000	130.000	111.598
200.000	130.000	114.000

230.000	130.000	114.000
240.000	130.000	109.000
240.593	130.000	601.482
129.127	140.000	322.818
130.000	140.000	119.000
160.000	140.000	119.000
180.000	140.000	119.000
200.000	140.000	119.000
230.000	140.000	119.000
230.873	140.000	577.182
140.000	160.000	350.000
160.000	160.000	124.000
180.000	160.000	124.000
200.000	160.000	124.000
220.000	160.000	550.000
180.000	160.653	.000

Factor of Safety = 4.117

SURFACE # 10

Coordinate X	Coordinate Y	Coordinate Z
180.000	46.742	.000
153.769	60.000	384.422
160.000	60.000	94.802
180.000	60.000	91.850
200.000	60.000	94.802
206.231	60.000	515.578
125.274	80.000	313.185
130.000	80.000	90.641
160.000	80.000	83.934
180.000	80.000	83.876
200.000	80.000	83.934
230.000	80.000	90.641
234.726	80.000	586.815
117.769	100.000	294.422
120.000	100.000	101.000
130.000	100.000	101.471
160.000	100.000	88.691
180.000	100.000	87.211
200.000	100.000	88.691
230.000	100.000	101.471
240.000	100.000	101.000
242.231	100.000	605.578
118.093	120.000	295.233
120.000	120.000	104.000
130.000	120.000	107.775
160.000	120.000	103.387
180.000	120.000	103.381
200.000	120.000	103.387
230.000	120.000	107.775
240.000	120.000	104.000
241.907	120.000	604.767
119.407	130.000	298.518
120.000	130.000	109.000
130.000	130.000	114.000

160.000	130.000	114.000
180.000	130.000	111.598
200.000	130.000	114.000
230.000	130.000	114.000
240.000	130.000	109.000
240.593	130.000	601.482
129.127	140.000	322.818
130.000	140.000	119.000
160.000	140.000	119.000
180.000	140.000	119.000
200.000	140.000	119.000
230.000	140.000	119.000
230.873	140.000	577.182
140.000	160.000	350.000
160.000	160.000	124.000
180.000	160.000	124.000
200.000	160.000	124.000
220.000	160.000	550.000
180.000	160.653	.000

Factor of Safety = 4.117

Example 2

Geometry of the Example 2 is shown on Figure B2. The following soil parameters were used:

Unit weight of soil	100 pcf
Cohesion	500 psf
Friction angle	0 deg

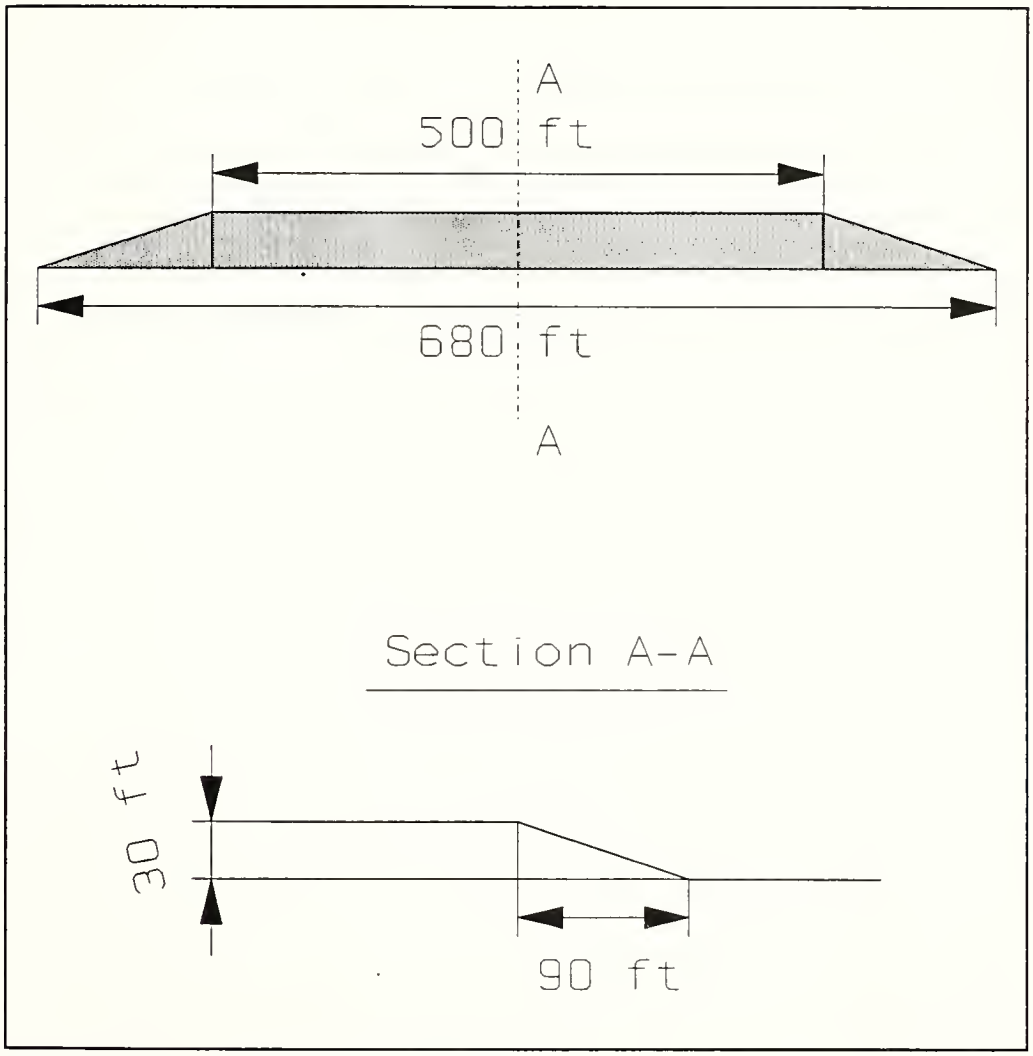

Figure B2 Illustration for Example 2

```
PCSTBL3D Version 2.0
15          13
1
40  60  80  100  120  130  160  180  200  230  240  260  280  300  320
0  20  40  60  80  100  120  130  140  160  180  200  230
100  100  100  106.67  113.33  120  126.67  130  130  130  130  130  130
100  100  100  106.67  113.33  120  126.67  130  130  130  130  130  130
100  100  100  106.67  113.33  120  126.67  130  130  130  130  130  130
100  100  100  106.67  113.33  120  126.67  130  130  130  130  130  130
100  100  100  106.67  113.33  120  126.67  130  130  130  130  130  130
100  100  100  106.67  113.33  120  126.67  130  130  130  130  130  130
100  100  100  106.67  113.33  120  126.67  130  130  130  130  130  130
100  100  100  106.67  113.33  120  126.67  130  130  130  130  130  130
100  100  100  106.67  113.33  120  126.67  130  130  130  130  130  130
100  100  100  106.67  113.33  120  126.67  130  130  130  130  130  130
100  100  100  106.67  113.33  120  126.67  130  130  130  130  130  130
100  100  100  106.67  113.33  120  126.67  130  130  130  130  130  130
100  100  100  106.67  113.33  120  126.67  130  130  130  130  130  130
100  100  100  106.67  113.33  120  126.67  130  130  130  130  130  130
8
20  40  110  60
120  40  200  40
120  40  200  40
120  40  200  40
100  40  220  40
100  40  220  40
100  40  220  40
100  40  220  40
100  40  220  40
100  40  220  40
120  40  200  40
120  40  200  40
120  40  200  40
120  40  200  40
79  20  79  20  79  20  79  25  79  30  79  35  79  40  79  45  79  45  79  45  79  45  79  45
79  20  79  20  79  20  79  25  79  30  79  35  79  40  79  45  79  45  79  45  79  45  79  45
79  20  79  20  79  20  79  25  79  30  79  35  79  40  79  45  79  45  79  45  79  45  79  45
79  20  79  20  79  20  79  25  79  30  79  35  79  40  79  45  79  45  79  45  79  45  79  45
79  20  79  20  79  20  79  25  79  30  79  35  79  40  79  45  79  45  79  45  79  45  79  45
79  20  79  20  79  20  79  25  79  30  79  35  79  40  79  45  79  45  79  45  79  45  79  45
79  20  79  20  79  20  79  25  79  30  79  35  79  40  79  45  79  45  79  45  79  45  79  45
79  20  79  20  79  20  79  25  79  30  79  35  79  40  79  45  79  45  79  45  79  45  79  45
79  20  79  20  79  20  79  25  79  30  79  35  79  40  79  45  79  45  79  45  79  45  79  45
79  20  79  20  79  20  79  25  79  30  79  35  79  40  79  45  79  45  79  45  79  45  79  45
79  20  79  20  79  20  79  25  79  30  79  35  79  40  79  45  79  45  79  45  79  45  79  45
79  20  79  20  79  20  79  25  79  30  79  35  79  40  79  45  79  45  79  45  79  45  79  45
79  20  79  20  79  20  79  25  79  30  79  35  79  40  79  45  79  45  79  45  79  45  79  45
79  20  79  20  79  20  79  25  79  30  79  35  79  40  79  45  79  45  79  45  79  45  79  45
100          500          0
1
0
```

```
*************************************************
*              PC-STABL3D                *
*   3-DIMENSIOANL SLOPE STABILITY PROGRAM   *
*         FROM PURDUE UNIVERSITY            *
*              VERSION 2.1                *
*************************************************
```

Number of X coordinates : 15
Number of Y coordinates : 13
Number of soils : 1

X COORDINATES :
coordinate X(1) = 40.00
coordinate X(2) = 60.00
coordinate X(3) = 80.00
coordinate X(4) = 100.00
coordinate X(5) = 120.00
coordinate X(6) = 130.00
coordinate X(7) = 160.00
coordinate X(8) = 180.00
coordinate X(9) = 200.00
coordinate X(10) = 230.00
coordinate X(11) = 240.00
coordinate X(12) = 260.00
coordinate X(13) = 280.00
coordinate X(14) = 300.00
coordinate X(15) = 320.00

Y COORDINATES :
coordinate Y(1) = .00
coordinate Y(2) = 20.00
coordinate Y(3) = 40.00
coordinate Y(4) = 60.00
coordinate Y(5) = 80.00
coordinate Y(6) = 100.00
coordinate Y(7) = 120.00
coordinate Y(8) = 130.00
coordinate Y(9) = 140.00
coordinate Y(10) = 160.00
coordinate Y(11) = 180.00
coordinate Y(12) = 200.00
coordinate Y(13) = 230.00

COORDINATES Z FOR SOIL # 1

Z (1, 1) = 100.00	Z (1, 2) = 100.00	Z (1, 3) = 100.00
Z (1, 4) = 106.67	Z (1, 5) = 113.33	Z (1, 6) = 120.00
Z (1, 7) = 126.67	Z (1, 8) = 130.00	Z (1, 9) = 130.00
Z (1,10) = 130.00	Z (1,11) = 130.00	Z (1,12) = 130.00
Z (1,13) = 130.00	Z (2, 1) = 100.00	Z (2, 2) = 100.00
Z (2, 3) = 100.00	Z (2, 4) = 106.67	Z (2, 5) = 113.33
Z (2, 6) = 120.00	Z (2, 7) = 126.67	Z (2, 8) = 130.00
Z (2, 9) = 130.00	Z (2,10) = 130.00	Z (2,11) = 130.00
Z (2,12) = 130.00	Z (2,13) = 130.00	Z (3, 1) = 100.00
Z (3, 2) = 100.00	Z (3, 3) = 100.00	Z (3, 4) = 106.67

Z (3, 5) = 113.33 Z (3, 6) = 120.00 Z (3, 7) = 126.67
Z (3, 8) = 130.00 Z (3, 9) = 130.00 Z (3,10) = 130.00
Z (3,11) = 130.00 Z (3,12) = 130.00 Z (3,13) = 130.00
Z (4, 1) = 100.00 Z (4, 2) = 100.00 Z (4, 3) = 100.00
Z (4, 4) = 106.67 Z (4, 5) = 113.33 Z (4, 6) = 120.00
Z (4, 7) = 126.67 Z (4, 8) = 130.00 Z (4, 9) = 130.00
Z (4,10) = 130.00 Z (4,11) = 130.00 Z (4,12) = 130.00
Z (4,13) = 130.00 Z (5, 1) = 100.00 Z (5, 2) = 100.00
Z (5, 3) = 100.00 Z (5, 4) = 106.67 Z (5, 5) = 113.33
Z (5, 6) = 120.00 Z (5, 7) = 126.67 Z (5, 8) = 130.00
Z (5, 9) = 130.00 Z (5,10) = 130.00 Z (5,11) = 130.00
Z (5,12) = 130.00 Z (5,13) = 130.00 Z (6, 1) = 100.00
Z (6, 2) = 100.00 Z (6, 3) = 100.00 Z (6, 4) = 106.67
Z (6, 5) = 113.33 Z (6, 6) = 120.00 Z (6, 7) = 126.67
Z (6, 8) = 130.00 Z (6, 9) = 130.00 Z (6,10) = 130.00
Z (6,11) = 130.00 Z (6,12) = 130.00 Z (6,13) = 130.00
Z (7, 1) = 100.00 Z (7, 2) = 100.00 Z (7, 3) = 100.00
Z (7, 4) = 106.67 Z (7, 5) = 113.33 Z (7, 6) = 120.00
Z (7, 7) = 126.67 Z (7, 8) = 130.00 Z (7, 9) = 130.00
Z (7,10) = 130.00 Z (7,11) = 130.00 Z (7,12) = 130.00
Z (7,13) = 130.00 Z (8, 1) = 100.00 Z (8, 2) = 100.00
Z (8, 3) = 100.00 Z (8, 4) = 106.67 Z (8, 5) = 113.33
Z (8, 6) = 120.00 Z (8, 7) = 126.67 Z (8, 8) = 130.00
Z (8, 9) = 130.00 Z (8,10) = 130.00 Z (8,11) = 130.00
Z (8,12) = 130.00 Z (8,13) = 130.00 Z (9, 1) = 100.00
Z (9, 2) = 100.00 Z (9, 3) = 100.00 Z (9, 4) = 106.67
Z (9, 5) = 113.33 Z (9, 6) = 120.00 Z (9, 7) = 126.67
Z (9, 8) = 130.00 Z (9, 9) = 130.00 Z (9,10) = 130.00
Z (9,11) = 130.00 Z (9,12) = 130.00 Z (9,13) = 130.00
Z (10, 1) = 100.00 Z (10, 2) = 100.00 Z (10, 3) = 100.00
Z (10, 4) = 106.67 Z (10, 5) = 113.33 Z (10, 6) = 120.00
Z (10, 7) = 126.67 Z (10, 8) = 130.00 Z (10, 9) = 130.00
Z (10,10) = 130.00 Z (10,11) = 130.00 Z (10,12) = 130.00
Z (10,13) = 130.00 Z (11, 1) = 100.00 Z (11, 2) = 100.00
Z (11, 3) = 100.00 Z (11, 4) = 106.67 Z (11, 5) = 113.33
Z (11, 6) = 120.00 Z (11, 7) = 126.67 Z (11, 8) = 130.00
Z (11, 9) = 130.00 Z (11,10) = 130.00 Z (11,11) = 130.00
Z (11,12) = 130.00 Z (11,13) = 130.00 Z (12, 1) = 100.00
Z (12, 2) = 100.00 Z (12, 3) = 100.00 Z (12, 4) = 106.67
Z (12, 5) = 113.33 Z (12, 6) = 120.00 Z (12, 7) = 126.67
Z (12, 8) = 130.00 Z (12, 9) = 130.00 Z (12,10) = 130.00
Z (12,11) = 130.00 Z (12,12) = 130.00 Z (12,13) = 130.00
Z (13, 1) = 100.00 Z (13, 2) = 100.00 Z (13, 3) = 100.00
Z (13, 4) = 106.67 Z (13, 5) = 113.33 Z (13, 6) = 120.00
Z (13, 7) = 126.67 Z (13, 8) = 130.00 Z (13, 9) = 130.00
Z (13,10) = 130.00 Z (13,11) = 130.00 Z (13,12) = 130.00
Z (13,13) = 130.00 Z (14, 1) = 100.00 Z (14, 2) = 100.00
Z (14, 3) = 100.00 Z (14, 4) = 106.67 Z (14, 5) = 113.33
Z (14, 6) = 120.00 Z (14, 7) = 126.67 Z (14, 8) = 130.00
Z (14, 9) = 130.00 Z (14,10) = 130.00 Z (14,11) = 130.00
Z (14,12) = 130.00 Z (14,13) = 130.00 Z (15, 1) = 100.00
Z (15, 2) = 100.00 Z (15, 3) = 100.00 Z (15, 4) = 106.67
Z (15, 5) = 113.33 Z (15, 6) = 120.00 Z (15, 7) = 126.67
Z (15, 8) = 130.00 Z (15, 9) = 130.00 Z (15,10) = 130.00
Z (15,11) = 130.00 Z (15,12) = 130.00 Z (15,13) = 130.00

BOUNDARIES FOR GENERATION IN THE Y DIRECTION :

Main Axis of Sliding was stablished at X = 180.00

Minimum point for initiation of polygonals at Y = 20.00
Interval for initiation of polygonals is = 40.00
Minimum point for termination of polygonals at Y = 110.00
Interval for termination of polygonals is = 60.00

BOUNDARIES FOR GENERATION IN THE X DIRECTION :

Coordinate Y = .00
Minimum point for initiation of polygonals at X = 120.00
Interval for initiation of polygonals is = 40.00
Minimum point for termination of polygonals at X = 200.00
Interval for termination of polygonals is = 40.00

Coordinate Y = 20.00
Minimum point for initiation of polygonals at X = 120.00
Interval for initiation of polygonals is = 40.00
Minimum point for termination of polygonals at X = 200.00
Interval for termination of polygonals is = 40.00

Coordinate Y = 40.00
Minimum point for initiation of polygonals at X = 120.00
Interval for initiation of polygonals is = 40.00
Minimum point for termination of polygonals at X = 200.00
Interval for termination of polygonals is = 40.00

Coordinate Y = 60.00
Minimum point for initiation of polygonals at X = 100.00
Interval for initiation of polygonals is = 40.00
Minimum point for termination of polygonals at X = 220.00
Interval for termination of polygonals is = 40.00

Coordinate Y = 80.00
Minimum point for initiation of polygonals at X = 100.00
Interval for initiation of polygonals is = 40.00
Minimum point for termination of polygonals at X = 220.00
Interval for termination of polygonals is = 40.00

Coordinate Y = 100.00
Minimum point for initiation of polygonals at X = 100.00
Interval for initiation of polygonals is = 40.00
Minimum point for termination of polygonals at X = 220.00
Interval for termination of polygonals is = 40.00

Coordinate Y = 120.00
Minimum point for initiation of polygonals at X = 100.00
Interval for initiation of polygonals is = 40.00
Minimum point for termination of polygonals at X = 220.00
Interval for termination of polygonals is = 40.00

Coordinate Y = 130.00
Minimum point for initiation of polygonals at X = 100.00
Interval for initiation of polygonals is = 40.00
Minimum point for termination of polygonals at X = 220.00
Interval for termination of polygonals is = 40.00

Coordinate Y = 140.00
Minimum point for initiation of polygonals at X = 100.00
Interval for initiation of polygonals is = 40.00
Minimum point for termination of polygonals at X = 220.00
Interval for termination of polygonals is = 40.00

Coordinate Y = 160.00
Minimum point for initiation of polygonals at X = 120.00
Interval for initiation of polygonals is = 40.00
Minimum point for termination of polygonals at X = 200.00
Interval for termination of polygonals is = 40.00

Coordinate Y = 180.00
Minimum point for initiation of polygonals at X = 120.00
Interval for initiation of polygonals is = 40.00
Minimum point for termination of polygonals at X = 200.00
Interval for termination of polygonals is = 40.00

Coordinate Y = 200.00
Minimum point for initiation of polygonals at X = 120.00
Interval for initiation of polygonals is = 40.00
Minimum point for termination of polygonals at X = 200.00
Interval for termination of polygonals is = 40.00

Coordinate Y = 230.00
Minimum point for initiation of polygonals at X = 120.00
Interval for initiation of polygonals is = 40.00
Minimum point for termination of polygonals at X = 200.00
Interval for termination of polygonals is = 40.00

BOUNDARIES FOR GENERATION IN THE Z DIRECTION :

Zmin(1, 1) = 79.00 Delta Z(1, 1) = 20.00
Zmin(1, 2) = 79.00 Delta Z(1, 2) = 20.00
Zmin(1, 3) = 79.00 Delta Z(1, 3) = 20.00
Zmin(1, 4) = 79.00 Delta Z(1, 4) = 25.00
Zmin(1, 5) = 79.00 Delta Z(1, 5) = 30.00
Zmin(1, 6) = 79.00 Delta Z(1, 6) = 35.00
Zmin(1, 7) = 79.00 Delta Z(1, 7) = 40.00
Zmin(1, 8) = 79.00 Delta Z(1, 8) = 45.00
Zmin(1, 9) = 79.00 Delta Z(1, 9) = 45.00
Zmin(1,10) = 79.00 Delta Z(1,10) = 45.00
Zmin(1,11) = 79.00 Delta Z(1,11) = 45.00
Zmin(1,12) = 79.00 Delta Z(1,12) = 45.00
Zmin(1,13) = 79.00 Delta Z(1,13) = 45.00

Zmin(2, 1) =	79.00	Delta Z(2, 1) =	20.00
Zmin(2, 2) =	79.00	Delta Z(2, 2) =	20.00
Zmin(2, 3) =	79.00	Delta Z(2, 3) =	20.00
Zmin(2, 4) =	79.00	Delta Z(2, 4) =	25.00
Zmin(2, 5) =	79.00	Delta Z(2, 5) =	30.00
Zmin(2, 6) =	79.00	Delta Z(2, 6) =	35.00
Zmin(2, 7) =	79.00	Delta Z(2, 7) =	40.00
Zmin(2, 8) =	79.00	Delta Z(2, 8) =	45.00
Zmin(2, 9) =	79.00	Delta Z(2, 9) =	45.00
Zmin(2,10) =	79.00	Delta Z(2,10) =	45.00
Zmin(2,11) =	79.00	Delta Z(2,11) =	45.00
Zmin(2,12) =	79.00	Delta Z(2,12) =	45.00
Zmin(2,13) =	79.00	Delta Z(2,13) =	45.00
Zmin(3, 1) =	79.00	Delta Z(3, 1) =	20.00
Zmin(3, 2) =	79.00	Delta Z(3, 2) =	20.00
Zmin(3, 3) =	79.00	Delta Z(3, 3) =	20.00
Zmin(3, 4) =	79.00	Delta Z(3, 4) =	25.00
Zmin(3, 5) =	79.00	Delta Z(3, 5) =	30.00
Zmin(3, 6) =	79.00	Delta Z(3, 6) =	35.00
Zmin(3, 7) =	79.00	Delta Z(3, 7) =	40.00
Zmin(3, 8) =	79.00	Delta Z(3, 8) =	45.00
Zmin(3, 9) =	79.00	Delta Z(3, 9) =	45.00
Zmin(3,10) =	79.00	Delta Z(3,10) =	45.00
Zmin(3,11) =	79.00	Delta Z(3,11) =	45.00
Zmin(3,12) =	79.00	Delta Z(3,12) =	45.00
Zmin(3,13) =	79.00	Delta Z(3,13) =	45.00
Zmin(4, 1) =	79.00	Delta Z(4, 1) =	20.00
Zmin(4, 2) =	79.00	Delta Z(4, 2) =	20.00
Zmin(4, 3) =	79.00	Delta Z(4, 3) =	20.00
Zmin(4, 4) =	79.00	Delta Z(4, 4) =	25.00
Zmin(4, 5) =	79.00	Delta Z(4, 5) =	30.00
Zmin(4, 6) =	79.00	Delta Z(4, 6) =	35.00
Zmin(4, 7) =	79.00	Delta Z(4, 7) =	40.00
Zmin(4, 8) =	79.00	Delta Z(4, 8) =	45.00
Zmin(4, 9) =	79.00	Delta Z(4, 9) =	45.00
Zmin(4,10) =	79.00	Delta Z(4,10) =	45.00
Zmin(4,11) =	79.00	Delta Z(4,11) =	45.00
Zmin(4,12) =	79.00	Delta Z(4,12) =	45.00
Zmin(4,13) =	79.00	Delta Z(4,13) =	45.00
Zmin(5, 1) =	79.00	Delta Z(5, 1) =	20.00
Zmin(5, 2) =	79.00	Delta Z(5, 2) =	20.00
Zmin(5, 3) =	79.00	Delta Z(5, 3) =	20.00
Zmin(5, 4) =	79.00	Delta Z(5, 4) =	25.00
Zmin(5, 5) =	79.00	Delta Z(5, 5) =	30.00
Zmin(5, 6) =	79.00	Delta Z(5, 6) =	35.00
Zmin(5, 7) =	79.00	Delta Z(5, 7) =	40.00
Zmin(5, 8) =	79.00	Delta Z(5, 8) =	45.00
Zmin(5, 9) =	79.00	Delta Z(5, 9) =	45.00
Zmin(5,10) =	79.00	Delta Z(5,10) =	45.00
Zmin(5,11) =	79.00	Delta Z(5,11) =	45.00
Zmin(5,12) =	79.00	Delta Z(5,12) =	45.00
Zmin(5,13) =	79.00	Delta Z(5,13) =	45.00
Zmin(6, 1) =	79.00	Delta Z(6, 1) =	20.00
Zmin(6, 2) =	79.00	Delta Z(6, 2) =	20.00
Zmin(6, 3) =	79.00	Delta Z(6, 3) =	20.00
Zmin(6, 4) =	79.00	Delta Z(6, 4) =	25.00
Zmin(6, 5) =	79.00	Delta Z(6, 5) =	30.00
Zmin(6, 6) =	79.00	Delta Z(6, 6) =	35.00

Zmin(6, 7) = 79.00 Delta Z(6, 7) = 40.00
Zmin(6, 8) = 79.00 Delta Z(6, 8) = 45.00
Zmin(6, 9) = 79.00 Delta Z(6, 9) = 45.00
Zmin(6,10) = 79.00 Delta Z(6,10) = 45.00
Zmin(6,11) = 79.00 Delta Z(6,11) = 45.00
Zmin(6,12) = 79.00 Delta Z(6,12) = 45.00
Zmin(6,13) = 79.00 Delta Z(6,13) = 45.00
Zmin(7, 1) = 79.00 Delta Z(7, 1) = 20.00
Zmin(7, 2) = 79.00 Delta Z(7, 2) = 20.00
Zmin(7, 3) = 79.00 Delta Z(7, 3) = 20.00
Zmin(7, 4) = 79.00 Delta Z(7, 4) = 25.00
Zmin(7, 5) = 79.00 Delta Z(7, 5) = 30.00
Zmin(7, 6) = 79.00 Delta Z(7, 6) = 35.00
Zmin(7, 7) = 79.00 Delta Z(7, 7) = 40.00
Zmin(7, 8) = 79.00 Delta Z(7, 8) = 45.00
Zmin(7, 9) = 79.00 Delta Z(7, 9) = 45.00
Zmin(7,10) = 79.00 Delta Z(7,10) = 45.00
Zmin(7,11) = 79.00 Delta Z(7,11) = 45.00
Zmin(7,12) = 79.00 Delta Z(7,12) = 45.00
Zmin(7,13) = 79.00 Delta Z(7,13) = 45.00
Zmin(8, 1) = 79.00 Delta Z(8, 1) = 20.00
Zmin(8, 2) = 79.00 Delta Z(8, 2) = 20.00
Zmin(8, 3) = 79.00 Delta Z(8, 3) = 20.00
Zmin(8, 4) = 79.00 Delta Z(8, 4) = 25.00
Zmin(8, 5) = 79.00 Delta Z(8, 5) = 30.00
Zmin(8, 6) = 79.00 Delta Z(8, 6) = 35.00
Zmin(8, 7) = 79.00 Delta Z(8, 7) = 40.00
Zmin(8, 8) = 79.00 Delta Z(8, 8) = 45.00
Zmin(8, 9) = 79.00 Delta Z(8, 9) = 45.00
Zmin(8,10) = 79.00 Delta Z(8,10) = 45.00
Zmin(8,11) = 79.00 Delta Z(8,11) = 45.00
Zmin(8,12) = 79.00 Delta Z(8,12) = 45.00
Zmin(8,13) = 79.00 Delta Z(8,13) = 45.00
Zmin(9, 1) = 79.00 Delta Z(9, 1) = 20.00
Zmin(9, 2) = 79.00 Delta Z(9, 2) = 20.00
Zmin(9, 3) = 79.00 Delta Z(9, 3) = 20.00
Zmin(9, 4) = 79.00 Delta Z(9, 4) = 25.00
Zmin(9, 5) = 79.00 Delta Z(9, 5) = 30.00
Zmin(9, 6) = 79.00 Delta Z(9, 6) = 35.00
Zmin(9, 7) = 79.00 Delta Z(9, 7) = 40.00
Zmin(9, 8) = 79.00 Delta Z(9, 8) = 45.00
Zmin(9, 9) = 79.00 Delta Z(9, 9) = 45.00
Zmin(9,10) = 79.00 Delta Z(9,10) = 45.00
Zmin(9,11) = 79.00 Delta Z(9,11) = 45.00
Zmin(9,12) = 79.00 Delta Z(9,12) = 45.00
Zmin(9,13) = 79.00 Delta Z(9,13) = 45.00
Zmin(10, 1) = 79.00 Delta Z(10, 1) = 20.00
Zmin(10, 2) = 79.00 Delta Z(10, 2) = 20.00
Zmin(10, 3) = 79.00 Delta Z(10, 3) = 20.00
Zmin(10, 4) = 79.00 Delta Z(10, 4) = 25.00
Zmin(10, 5) = 79.00 Delta Z(10, 5) = 30.00
Zmin(10, 6) = 79.00 Delta Z(10, 6) = 35.00
Zmin(10, 7) = 79.00 Delta Z(10, 7) = 40.00
Zmin(10, 8) = 79.00 Delta Z(10, 8) = 45.00
Zmin(10, 9) = 79.00 Delta Z(10, 9) = 45.00
Zmin(10,10) = 79.00 Delta Z(10,10) = 45.00
Zmin(10,11) = 79.00 Delta Z(10,11) = 45.00
Zmin(10,12) = 79.00 Delta Z(10,12) = 45.00

Zmin(10,13) = 79.00 Delta Z(10,13) = 45.00
Zmin(11, 1) = 79.00 Delta Z(11, 1) = 20.00
Zmin(11, 2) = 79.00 Delta Z(11, 2) = 20.00
Zmin(11, 3) = 79.00 Delta Z(11, 3) = 20.00
Zmin(11, 4) = 79.00 Delta Z(11, 4) = 25.00
Zmin(11, 5) = 79.00 Delta Z(11, 5) = 30.00
Zmin(11, 6) = 79.00 Delta Z(11, 6) = 35.00
Zmin(11, 7) = 79.00 Delta Z(11, 7) = 40.00
Zmin(11, 8) = 79.00 Delta Z(11, 8) = 45.00
Zmin(11, 9) = 79.00 Delta Z(11, 9) = 45.00
Zmin(11,10) = 79.00 Delta Z(11,10) = 45.00
Zmin(11,11) = 79.00 Delta Z(11,11) = 45.00
Zmin(11,12) = 79.00 Delta Z(11,12) = 45.00
Zmin(11,13) = 79.00 Delta Z(11,13) = 45.00
Zmin(12, 1) = 79.00 Delta Z(12, 1) = 20.00
Zmin(12, 2) = 79.00 Delta Z(12, 2) = 20.00
Zmin(12, 3) = 79.00 Delta Z(12, 3) = 20.00
Zmin(12, 4) = 79.00 Delta Z(12, 4) = 25.00
Zmin(12, 5) = 79.00 Delta Z(12, 5) = 30.00
Zmin(12, 6) = 79.00 Delta Z(12, 6) = 35.00
Zmin(12, 7) = 79.00 Delta Z(12, 7) = 40.00
Zmin(12, 8) = 79.00 Delta Z(12, 8) = 45.00
Zmin(12, 9) = 79.00 Delta Z(12, 9) = 45.00
Zmin(12,10) = 79.00 Delta Z(12,10) = 45.00
Zmin(12,11) = 79.00 Delta Z(12,11) = 45.00
Zmin(12,12) = 79.00 Delta Z(12,12) = 45.00
Zmin(12,13) = 79.00 Delta Z(12,13) = 45.00
Zmin(13, 1) = 79.00 Delta Z(13, 1) = 20.00
Zmin(13, 2) = 79.00 Delta Z(13, 2) = 20.00
Zmin(13, 3) = 79.00 Delta Z(13, 3) = 20.00
Zmin(13, 4) = 79.00 Delta Z(13, 4) = 25.00
Zmin(13, 5) = 79.00 Delta Z(13, 5) = 30.00
Zmin(13, 6) = 79.00 Delta Z(13, 6) = 35.00
Zmin(13, 7) = 79.00 Delta Z(13, 7) = 40.00
Zmin(13, 8) = 79.00 Delta Z(13, 8) = 45.00
Zmin(13, 9) = 79.00 Delta Z(13, 9) = 45.00
Zmin(13,10) = 79.00 Delta Z(13,10) = 45.00
Zmin(13,11) = 79.00 Delta Z(13,11) = 45.00
Zmin(13,12) = 79.00 Delta Z(13,12) = 45.00
Zmin(13,13) = 79.00 Delta Z(13,13) = 45.00
Zmin(14, 1) = 79.00 Delta Z(14, 1) = 20.00
Zmin(14, 2) = 79.00 Delta Z(14, 2) = 20.00
Zmin(14, 3) = 79.00 Delta Z(14, 3) = 20.00
Zmin(14, 4) = 79.00 Delta Z(14, 4) = 25.00
Zmin(14, 5) = 79.00 Delta Z(14, 5) = 30.00
Zmin(14, 6) = 79.00 Delta Z(14, 6) = 35.00
Zmin(14, 7) = 79.00 Delta Z(14, 7) = 40.00
Zmin(14, 8) = 79.00 Delta Z(14, 8) = 45.00
Zmin(14, 9) = 79.00 Delta Z(14, 9) = 45.00
Zmin(14,10) = 79.00 Delta Z(14,10) = 45.00
Zmin(14,11) = 79.00 Delta Z(14,11) = 45.00
Zmin(14,12) = 79.00 Delta Z(14,12) = 45.00
Zmin(14,13) = 79.00 Delta Z(14,13) = 45.00
Zmin(15, 1) = 79.00 Delta Z(15, 1) = 20.00
Zmin(15, 2) = 79.00 Delta Z(15, 2) = 20.00
Zmin(15, 3) = 79.00 Delta Z(15, 3) = 20.00
Zmin(15, 4) = 79.00 Delta Z(15, 4) = 25.00
Zmin(15, 5) = 79.00 Delta Z(15, 5) = 30.00

Zmin(15, 6) = 79.00 Delta Z(15, 6) = 35.00
Zmin(15, 7) = 79.00 Delta Z(15, 7) = 40.00
Zmin(15, 8) = 79.00 Delta Z(15, 8) = 45.00
Zmin(15, 9) = 79.00 Delta Z(15, 9) = 45.00
Zmin(15,10) = 79.00 Delta Z(15,10) = 45.00
Zmin(15,11) = 79.00 Delta Z(15,11) = 45.00
Zmin(15,12) = 79.00 Delta Z(15,12) = 45.00
Zmin(15,13) = 79.00 Delta Z(15,13) = 45.00

SOIL PROPERTIES :

Soil	Unit Weight	Cohesion	Shear Angle
1	100.00	500.0	.0

Ru of soil # 1 = .00

TEN MOST CRITICAL SURFACES :

SURFACE # 1

Coordinate X	Coordinate Y	Coordinate Z
180.000	40.307	.000
148.097	60.000	370.244
160.000	60.000	84.276
180.000	60.000	82.207
200.000	60.000	84.276
211.903	60.000	529.756
121.131	80.000	302.828
130.000	80.000	84.292
160.000	80.000	80.698
180.000	80.000	79.154
200.000	80.000	80.698
230.000	80.000	84.292
238.869	80.000	597.172
113.743	100.000	303.324
120.000	100.000	104.000
130.000	100.000	104.000
160.000	100.000	93.758
180.000	100.000	87.428
200.000	100.000	93.758
230.000	100.000	104.000
240.000	100.000	104.000
246.257	100.000	656.706
117.008	120.000	331.512
120.000	120.000	109.000
130.000	120.000	109.000
160.000	120.000	109.000
180.000	120.000	103.140
200.000	120.000	109.000
230.000	120.000	109.000
240.000	120.000	109.000
242.992	120.000	688.458

119.850	130.000	359.551
120.000	130.000	114.000
130.000	130.000	114.000
160.000	130.000	114.000
180.000	130.000	114.000
200.000	130.000	114.000
230.000	130.000	114.000
240.000	130.000	114.000
240.150	130.000	720.449
132.629	140.000	420.004
160.000	140.000	119.000
180.000	140.000	119.000
200.000	140.000	119.000
227.371	140.000	720.026
180.000	152.146	.000

Factor of Safety = 4.096

SURFACE # 2

Coordinate X	Coordinate Y	Coordinate Z
180.000	40.307	.000
148.097	60.000	370.244
160.000	60.000	84.276
180.000	60.000	82.207
200.000	60.000	84.276
211.903	60.000	529.756
121.131	80.000	302.828
130.000	80.000	84.292
160.000	80.000	80.698
180.000	80.000	79.154
200.000	80.000	80.698
230.000	80.000	84.292
238.869	80.000	597.172
113.743	100.000	303.324
120.000	100.000	104.000
130.000	100.000	104.000
160.000	100.000	93.758
180.000	100.000	87.428
200.000	100.000	93.758
230.000	100.000	104.000
240.000	100.000	104.000
246.257	100.000	656.706
117.008	120.000	331.512
120.000	120.000	109.000
130.000	120.000	109.000
160.000	120.000	109.000
180.000	120.000	103.140
200.000	120.000	109.000
230.000	120.000	109.000
240.000	120.000	109.000
242.992	120.000	688.458
119.850	130.000	359.551
120.000	130.000	114.000
130.000	130.000	114.000
160.000	130.000	114.000

180.000	130.000	114.000
200.000	130.000	114.000
230.000	130.000	114.000
240.000	130.000	114.000
240.150	130.000	720.449
132.629	140.000	420.004
160.000	140.000	119.000
180.000	140.000	119.000
200.000	140.000	119.000
227.371	140.000	720.026
180.000	152.146	.000

Factor of Safety = 4.096

SURFACE # 3

Coordinate X	Coordinate Y	Coordinate Z
180.000	46.742	.000
153.769	60.000	384.422
160.000	60.000	94.802
180.000	60.000	91.850
200.000	60.000	94.802
206.231	60.000	515.578
125.274	80.000	313.185
130.000	80.000	90.641
160.000	80.000	83.934
180.000	80.000	83.876
200.000	80.000	83.934
230.000	80.000	90.641
234.726	80.000	586.815
117.769	100.000	314.059
120.000	100.000	104.000
130.000	100.000	101.471
160.000	100.000	88.691
180.000	100.000	87.211
200.000	100.000	88.691
230.000	100.000	101.471
240.000	100.000	104.000
242.231	100.000	645.971
118.093	120.000	334.587
120.000	120.000	109.000
130.000	120.000	107.775
160.000	120.000	103.387
180.000	120.000	103.381
200.000	120.000	103.387
230.000	120.000	107.775
240.000	120.000	109.000
241.907	120.000	685.383
119.407	130.000	358.221
120.000	130.000	114.000
130.000	130.000	114.000
160.000	130.000	114.000
180.000	130.000	111.598
200.000	130.000	114.000
230.000	130.000	114.000
240.000	130.000	114.000

240.593	130.000	721.779
129.127	140.000	408.913
130.000	140.000	119.000
160.000	140.000	119.000
180.000	140.000	119.000
200.000	140.000	119.000
230.000	140.000	119.000
230.873	140.000	731.117
140.000	160.000	455.000
160.000	160.000	124.000
180.000	160.000	124.000
200.000	160.000	124.000
220.000	160.000	715.000
180.000	160.653	.000

Factor of Safety = 4.308

SURFACE # 4

Coordinate X	Coordinate Y	Coordinate Z
180.000	46.742	.000
153.769	60.000	384.422
160.000	60.000	94.802
180.000	60.000	91.850
200.000	60.000	94.802
206.231	60.000	515.578
125.274	80.000	313.185
130.000	80.000	90.641
160.000	80.000	83.934
180.000	80.000	83.876
200.000	80.000	83.934
230.000	80.000	90.641
234.726	80.000	586.815
117.769	100.000	314.059
120.000	100.000	104.000
130.000	100.000	101.471
160.000	100.000	88.691
180.000	100.000	87.211
200.000	100.000	88.691
230.000	100.000	101.471
240.000	100.000	104.000
242.231	100.000	645.971
118.093	120.000	334.587
120.000	120.000	109.000
130.000	120.000	107.775
160.000	120.000	103.387
180.000	120.000	103.381
200.000	120.000	103.387
230.000	120.000	107.775
240.000	120.000	109.000
241.907	120.000	685.383
119.407	130.000	358.221
120.000	130.000	114.000
130.000	130.000	114.000
160.000	130.000	114.000
180.000	130.000	111.598

200.000	130.000	114.000
230.000	130.000	114.000
240.000	130.000	114.000
240.593	130.000	721.779
129.127	140.000	408.913
130.000	140.000	119.000
160.000	140.000	119.000
180.000	140.000	119.000
200.000	140.000	119.000
230.000	140.000	119.000
230.873	140.000	731.117
140.000	160.000	455.000
160.000	160.000	124.000
180.000	160.000	124.000
200.000	160.000	124.000
220.000	160.000	715.000
180.000	160.653	.000

Factor of Safety = 4.308

SURFACE # 5

Coordinate X	Coordinate Y	Coordinate Z
180.000	46.742	.000
153.769	60.000	384.422
160.000	60.000	94.802
180.000	60.000	91.850
200.000	60.000	94.802
206.231	60.000	515.578
125.274	80.000	313.185
130.000	80.000	90.641
160.000	80.000	83.934
180.000	80.000	83.876
200.000	80.000	83.934
230.000	80.000	90.641
234.726	80.000	586.815
117.769	100.000	314.059
120.000	100.000	104.000
130.000	100.000	101.471
160.000	100.000	88.691
180.000	100.000	87.211
200.000	100.000	88.691
230.000	100.000	101.471
240.000	100.000	104.000
242.231	100.000	645.971
118.093	120.000	334.587
120.000	120.000	109.000
130.000	120.000	107.775
160.000	120.000	103.387
180.000	120.000	103.381
200.000	120.000	103.387
230.000	120.000	107.775
240.000	120.000	109.000
241.907	120.000	685.383
119.407	130.000	358.221
120.000	130.000	114.000

130.000	130.000	114.000
160.000	130.000	114.000
180.000	130.000	111.598
200.000	130.000	114.000
230.000	130.000	114.000
240.000	130.000	114.000
240.593	130.000	721.779
129.127	140.000	408.913
130.000	140.000	119.000
160.000	140.000	119.000
180.000	140.000	119.000
200.000	140.000	119.000
230.000	140.000	119.000
230.873	140.000	731.117
140.000	160.000	455.000
160.000	160.000	124.000
180.000	160.000	124.000
200.000	160.000	124.000
220.000	160.000	715.000
180.000	160.653	.000

Factor of Safety = 4.308

SURFACE # 6

Coordinate X	Coordinate Y	Coordinate Z
180.000	46.742	.000
153.769	60.000	384.422
160.000	60.000	94.802
180.000	60.000	91.850
200.000	60.000	94.802
206.231	60.000	515.578
125.274	80.000	313.185
130.000	80.000	90.641
160.000	80.000	83.934
180.000	80.000	83.876
200.000	80.000	83.934
230.000	80.000	90.641
234.726	80.000	586.815
117.769	100.000	314.059
120.000	100.000	104.000
130.000	100.000	101.471
160.000	100.000	88.691
180.000	100.000	87.211
200.000	100.000	88.691
230.000	100.000	101.471
240.000	100.000	104.000
242.231	100.000	645.971
118.093	120.000	334.587
120.000	120.000	109.000
130.000	120.000	107.775
160.000	120.000	103.387
180.000	120.000	103.381
200.000	120.000	103.387
230.000	120.000	107.775
240.000	120.000	109.000

241.907	120.000	685.383
119.407	130.000	358.221
120.000	130.000	114.000
130.000	130.000	114.000
160.000	130.000	114.000
180.000	130.000	111.598
200.000	130.000	114.000
230.000	130.000	114.000
240.000	130.000	114.000
240.593	130.000	721.779
129.127	140.000	408.913
130.000	140.000	119.000
160.000	140.000	119.000
180.000	140.000	119.000
200.000	140.000	119.000
230.000	140.000	119.000
230.873	140.000	731.117
140.000	160.000	455.000
160.000	160.000	124.000
180.000	160.000	124.000
200.000	160.000	124.000
220.000	160.000	715.000
180.000	160.653	.000

Factor of Safety = 4.308

SURFACE # 7

Coordinate X	Coordinate Y	Coordinate Z
180.000	46.742	.000
153.769	60.000	384.422
160.000	60.000	94.802
180.000	60.000	91.850
200.000	60.000	94.802
206.231	60.000	515.578
125.274	80.000	313.185
130.000	80.000	90.641
160.000	80.000	83.934
180.000	80.000	83.876
200.000	80.000	83.934
230.000	80.000	90.641
234.726	80.000	586.815
117.769	100.000	314.059
120.000	100.000	104.000
130.000	100.000	101.471
160.000	100.000	88.691
180.000	100.000	87.211
200.000	100.000	88.691
230.000	100.000	101.471
240.000	100.000	104.000
242.231	100.000	645.971
118.093	120.000	334.587
120.000	120.000	109.000
130.000	120.000	107.775
160.000	120.000	103.387
180.000	120.000	103.381

200.000	120.000	103.387
230.000	120.000	107.775
240.000	120.000	109.000
241.907	120.000	685.383
119.407	130.000	358.221
120.000	130.000	114.000
130.000	130.000	114.000
160.000	130.000	114.000
180.000	130.000	111.598
200.000	130.000	114.000
230.000	130.000	114.000
240.000	130.000	114.000
240.593	130.000	721.779
129.127	140.000	408.913
130.000	140.000	119.000
160.000	140.000	119.000
180.000	140.000	119.000
200.000	140.000	119.000
230.000	140.000	119.000
230.873	140.000	731.117
140.000	160.000	455.000
160.000	160.000	124.000
180.000	160.000	124.000
200.000	160.000	124.000
220.000	160.000	715.000
180.000	160.653	.000

Factor of Safety = 4.308

SURFACE # 8

Coordinate X	Coordinate Y	Coordinate Z
180.000	46.742	.000
153.769	60.000	384.422
160.000	60.000	94.802
180.000	60.000	91.850
200.000	60.000	94.802
206.231	60.000	515.578
125.274	80.000	313.185
130.000	80.000	90.641
160.000	80.000	83.934
180.000	80.000	83.876
200.000	80.000	83.934
230.000	80.000	90.641
234.726	80.000	586.815
117.769	100.000	314.059
120.000	100.000	104.000
130.000	100.000	101.471
160.000	100.000	88.691
180.000	100.000	87.211
200.000	100.000	88.691
230.000	100.000	101.471
240.000	100.000	104.000
242.231	100.000	645.971
118.093	120.000	334.587
120.000	120.000	109.000

130.000	120.000	107.775
160.000	120.000	103.387
180.000	120.000	103.381
200.000	120.000	103.387
230.000	120.000	107.775
240.000	120.000	109.000
241.907	120.000	685.383
119.407	130.000	358.221
120.000	130.000	114.000
130.000	130.000	114.000
160.000	130.000	114.000
180.000	130.000	111.598
200.000	130.000	114.000
230.000	130.000	114.000
240.000	130.000	114.000
240.593	130.000	721.779
129.127	140.000	408.913
130.000	140.000	119.000
160.000	140.000	119.000
180.000	140.000	119.000
200.000	140.000	119.000
230.000	140.000	119.000
230.873	140.000	731.117
140.000	160.000	455.000
160.000	160.000	124.000
180.000	160.000	124.000
200.000	160.000	124.000
220.000	160.000	715.000
180.000	160.653	.000

Factor of Safety = 4.308

SURFACE # 9

Coordinate X	Coordinate Y	Coordinate Z
180.000	46.742	.000
153.769	60.000	384.422
160.000	60.000	94.802
180.000	60.000	91.850
200.000	60.000	94.802
206.231	60.000	515.578
125.274	80.000	313.185
130.000	80.000	90.641
160.000	80.000	83.934
180.000	80.000	83.876
200.000	80.000	83.934
230.000	80.000	90.641
234.726	80.000	586.815
117.769	100.000	314.059
120.000	100.000	104.000
130.000	100.000	101.471
160.000	100.000	88.691
180.000	100.000	87.211
200.000	100.000	88.691
230.000	100.000	101.471
240.000	100.000	104.000

242.231	100.000	645.971
118.093	120.000	334.587
120.000	120.000	109.000
130.000	120.000	107.775
160.000	120.000	103.387
180.000	120.000	103.381
200.000	120.000	103.387
230.000	120.000	107.775
240.000	120.000	109.000
241.907	120.000	685.383
119.407	130.000	358.221
120.000	130.000	114.000
130.000	130.000	114.000
160.000	130.000	114.000
180.000	130.000	111.598
200.000	130.000	114.000
230.000	130.000	114.000
240.000	130.000	114.000
240.593	130.000	721.779
129.127	140.000	408.913
130.000	140.000	119.000
160.000	140.000	119.000
180.000	140.000	119.000
200.000	140.000	119.000
230.000	140.000	119.000
230.873	140.000	731.117
140.000	160.000	455.000
160.000	160.000	124.000
180.000	160.000	124.000
200.000	160.000	124.000
220.000	160.000	715.000
180.000	160.653	.000

Factor of Safety = 4.308

SURFACE # 10

Coordinate X	Coordinate Y	Coordinate Z
180.000	43.397	.000
150.678	60.000	376.696
160.000	60.000	88.254
180.000	60.000	86.833
200.000	60.000	88.254
209.322	60.000	523.304
122.693	80.000	306.733
130.000	80.000	97.993
160.000	80.000	83.627
180.000	80.000	82.713
200.000	80.000	83.627
230.000	80.000	97.993
237.307	80.000	593.267
114.992	100.000	306.656
120.000	100.000	99.357
130.000	100.000	89.323
160.000	100.000	88.130
180.000	100.000	87.966

200.000	100.000	88.130
230.000	100.000	89.323
240.000	100.000	99.357
245.008	100.000	653.374
116.531	120.000	330.162
120.000	120.000	109.000
130.000	120.000	109.000
160.000	120.000	107.418
180.000	120.000	102.401
200.000	120.000	107.418
230.000	120.000	109.000
240.000	120.000	109.000
243.469	120.000	689.808
118.355	130.000	355.065
120.000	130.000	114.000
130.000	130.000	114.000
160.000	130.000	112.261
180.000	130.000	112.238
200.000	130.000	112.261
230.000	130.000	114.000
240.000	130.000	114.000
241.645	130.000	724.935
128.958	140.000	408.377
130.000	140.000	119.000
160.000	140.000	119.000
180.000	140.000	119.000
200.000	140.000	119.000
230.000	140.000	119.000
231.042	140.000	731.653
180.000	156.018	.000

Factor of Safety = 4.552

Example 3

Geometry of the Example 3 is shown on Figure B3. The following soil parameters were used:

Unit weight of soil	110 pcf
Cohesion	100 psf
Friction angle	28 deg

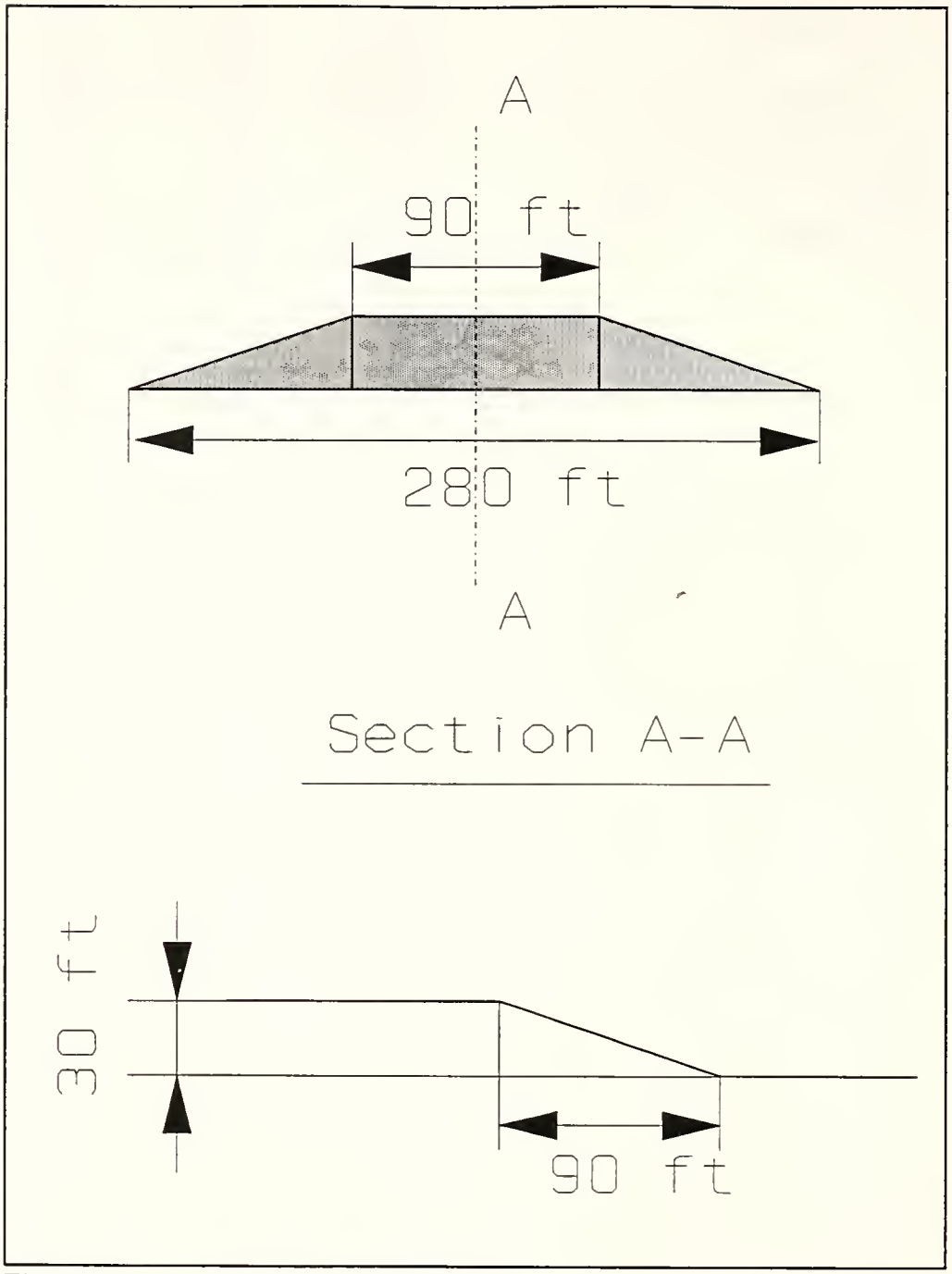

Figure B3 Illustration for Example 3

```
PCSTBL3D Version 2.0
 15          13
 1
 40  60  80  100  120  130  160  180  200  230  240  260  280  300  320
 0  20  40  60  80  100  120  130  140  160  180  200  230
 100  100  100  100  100  100  100  100  100  100  100  100  100
 100  100  100  100  100  100  103.33  106.67  106.67  106.67  106.67  106.67  106.67
 100  100  100  100  100  103.33  110  113.33  113.33  113.33  113.33  113.33  113.33
 100  100  100  100  103.33  110  116.67  120  120  120  120  120  120
 100  100  100  103.33  110  116.67  123.33  126.67  126.67  126.67  126.67  126.67  126.67
 100  100  100  106.67  113.33  120  126.67  130  130  130  130  130  130
 100  100  100  106.67  113.33  120  126.67  130  130  130  130  130  130
 100  100  100  106.67  113.33  120  126.67  130  130  130  130  130  130
 100  100  100  106.67  113.33  120  126.67  130  130  130  130  130  130
 100  100  100  106.67  113.33  120  126.67  130  130  130  130  130  130
 100  100  100  103.33  110  116.67  123.33  126.67  126.67  126.67  126.67  126.67  126.67
 100  100  100  100  103.33  110  116.67  120  120  120  120  120  120
 100  100  100  100  100  103.33  110  113.33  113.33  113.33  113.33  113.33  113.33
 100  100  100  100  100  100  103.33  106.67  106.67  106.67  106.67  106.67  106.67
 100  100  100  100  100  100  100  100  100  100  100  100  100  100
 8
 20  40  110  60
 120  40  200  40
 120  40  200  40
 120  40  200  40
 100  40  220  40
 100  40  220  40
 100  40  220  40
 100  40  220  40
 100  40  220  40
 100  40  220  40
 120  40  200  40
 120  40  200  40
 120  40  200  40
 120  40  200  40
 79  20  79  20  79  20  79  20  79  20  79  20  79  20  79  20  79  20  79  20  79  20  79  20  79  20
 79  20  79  20  79  20  79  20  79  20  79  20  79  21  79  24  79  24  79  24  79  24  79  24  79  24
 79  20  79  20  79  20  79  20  79  20  79  22  79  25  79  30  79  30  79  30  79  30  79  30  79  30
 79  20  79  20  79  20  79  20  79  22  79  25  79  32  79  35  79  35  79  35  79  35  79  35  79  35
 79  20  79  20  79  20  79  22  79  25  79  30  79  35  79  35  79  35  79  35  79  35  79  35  79  35
 79  20  79  20  79  20  79  25  79  30  79  35  79  40  79  45  79  45  79  45  79  45  79  45  79  45
 79  20  79  20  79  20  79  25  79  30  79  35  79  40  79  45  79  45  79  45  79  45  79  45  79  45
 79  20  79  20  79  20  79  25  79  30  79  35  79  40  79  45  79  45  79  45  79  45  79  45  79  45
 79  20  79  20  79  20  79  25  79  30  79  35  79  40  79  45  79  45  79  45  79  45  79  45  79  45
 79  20  79  20  79  20  79  25  79  30  79  35  79  40  79  45  79  45  79  45  79  45  79  45  79  45
 79  20  79  20  79  20  79  22  79  25  79  30  79  35  79  35  79  35  79  35  79  35  79  35  79  35
 79  20  79  20  79  20  79  20  79  22  79  25  79  32  79  35  79  35  79  35  79  35  79  35  79  35
 79  20  79  20  79  20  79  20  79  20  79  22  79  25  79  30  79  30  79  30  79  30  79  30  79  30
 79  20  79  20  79  20  79  20  79  20  79  20  79  21  79  24  79  24  79  24  79  24  79  24  79  24
 79  20  79  20  79  20  79  20  79  20  79  20  79  20  79  20  79  20  79  20  79  20  79  20  79  20
 110          100          28
 1
 0
```

```
*********************************************
*            PC-STABL3D                     *
*  3-DIMENSIOANL SLOPE STABILITY PROGRAM    *
*       FROM PURDUE UNIVERSITY              *
*            VERSION 2.1                    *
*********************************************

 Number of X coordinates :  15
 Number of Y coordinates :  13
 Number of soils :  1


 X COORDINATES :
 coordinate X(  1) =   40.00
 coordinate X(  2) =   60.00
 coordinate X(  3) =   80.00
 coordinate X(  4) =  100.00
 coordinate X(  5) =  120.00
 coordinate X(  6) =  130.00
 coordinate X(  7) =  160.00
 coordinate X(  8) =  180.00
 coordinate X(  9) =  200.00
 coordinate X( 10) =  230.00
 coordinate X( 11) =  240.00
 coordinate X( 12) =  260.00
 coordinate X( 13) =  280.00
 coordinate X( 14) =  300.00
 coordinate X( 15) =  320.00


 Y COORDINATES :
 coordinate Y(  1) =    .00
 coordinate Y(  2) =   20.00
 coordinate Y(  3) =   40.00
 coordinate Y(  4) =   60.00
 coordinate Y(  5) =   80.00
 coordinate Y(  6) =  100.00
 coordinate Y(  7) =  120.00
 coordinate Y(  8) =  130.00
 coordinate Y(  9) =  140.00
 coordinate Y( 10) =  160.00
 coordinate Y( 11) =  180.00
 coordinate Y( 12) =  200.00
 coordinate Y( 13) =  230.00

 COORDINATES Z FOR SOIL #  1

 Z ( 1, 1) =  100.00   Z ( 1, 2) =  100.00   Z ( 1, 3) =  100.00
 Z ( 1, 4) =  100.00   Z ( 1, 5) =  100.00   Z ( 1, 6) =  100.00
 Z ( 1, 7) =  100.00   Z ( 1, 8) =  100.00   Z ( 1, 9) =  100.00
 Z ( 1,10) =  100.00   Z ( 1,11) =  100.00   Z ( 1,12) =  100.00
 Z ( 1,13) =  100.00   Z ( 2, 1) =  100.00   Z ( 2, 2) =  100.00
 Z ( 2, 3) =  100.00   Z ( 2, 4) =  100.00   Z ( 2, 5) =  100.00
 Z ( 2, 6) =  100.00   Z ( 2, 7) =  103.33   Z ( 2, 8) =  106.67
 Z ( 2, 9) =  106.67   Z ( 2,10) =  106.67   Z ( 2,11) =  106.67
 Z ( 2,12) =  106.67   Z ( 2,13) =  106.67   Z ( 3, 1) =  100.00
 Z ( 3, 2) =  100.00   Z ( 3, 3) =  100.00   Z ( 3, 4) =  100.00
```

Z (3, 5) = 100.00 Z (3, 6) = 103.33 Z (3, 7) = 110.00
Z (3, 8) = 113.33 Z (3, 9) = 113.33 Z (3,10) = 113.33
Z (3,11) = 113.33 Z (3,12) = 113.33 Z (3,13) = 113.33
Z (4, 1) = 100.00 Z (4, 2) = 100.00 Z (4, 3) = 100.00
Z (4, 4) = 100.00 Z (4, 5) = 103.33 Z (4, 6) = 110.00
Z (4, 7) = 116.67 Z (4, 8) = 120.00 Z (4, 9) = 120.00
Z (4,10) = 120.00 Z (4,11) = 120.00 Z (4,12) = 120.00
Z (4,13) = 120.00 Z (5, 1) = 100.00 Z (5, 2) = 100.00
Z (5, 3) = 100.00 Z (5, 4) = 103.33 Z (5, 5) = 110.00
Z (5, 6) = 116.67 Z (5, 7) = 123.33 Z (5, 8) = 126.67
Z (5, 9) = 126.67 Z (5,10) = 126.67 Z (5,11) = 126.67
Z (5,12) = 126.67 Z (5,13) = 126.67 Z (6, 1) = 100.00
Z (6, 2) = 100.00 Z (6, 3) = 100.00 Z (6, 4) = 106.67
Z (6, 5) = 113.33 Z (6, 6) = 120.00 Z (6, 7) = 126.67
Z (6, 8) = 130.00 Z (6, 9) = 130.00 Z (6,10) = 130.00
Z (6,11) = 130.00 Z (6,12) = 130.00 Z (6,13) = 130.00
Z (7, 1) = 100.00 Z (7, 2) = 100.00 Z (7, 3) = 100.00
Z (7, 4) = 106.67 Z (7, 5) = 113.33 Z (7, 6) = 120.00
Z (7, 7) = 126.67 Z (7, 8) = 130.00 Z (7, 9) = 130.00
Z (7,10) = 130.00 Z (7,11) = 130.00 Z (7,12) = 130.00
Z (7,13) = 130.00 Z (8, 1) = 100.00 Z (8, 2) = 100.00
Z (8, 3) = 100.00 Z (8, 4) = 106.67 Z (8, 5) = 113.33
Z (8, 6) = 120.00 Z (8, 7) = 126.67 Z (8, 8) = 130.00
Z (8, 9) = 130.00 Z (8,10) = 130.00 Z (8,11) = 130.00
Z (8,12) = 130.00 Z (8,13) = 130.00 Z (9, 1) = 100.00
Z (9, 2) = 100.00 Z (9, 3) = 100.00 Z (9, 4) = 106.67
Z (9, 5) = 113.33 Z (9, 6) = 120.00 Z (9, 7) = 126.67
Z (9, 8) = 130.00 Z (9, 9) = 130.00 Z (9,10) = 130.00
Z (9,11) = 130.00 Z (9,12) = 130.00 Z (9,13) = 130.00
Z (10, 1) = 100.00 Z (10, 2) = 100.00 Z (10, 3) = 100.00
Z (10, 4) = 106.67 Z (10, 5) = 113.33 Z (10, 6) = 120.00
Z (10, 7) = 126.67 Z (10, 8) = 130.00 Z (10, 9) = 130.00
Z (10,10) = 130.00 Z (10,11) = 130.00 Z (10,12) = 130.00
Z (10,13) = 130.00 Z (11, 1) = 100.00 Z (11, 2) = 100.00
Z (11, 3) = 100.00 Z (11, 4) = 103.33 Z (11, 5) = 110.00
Z (11, 6) = 116.67 Z (11, 7) = 123.33 Z (11, 8) = 126.67
Z (11, 9) = 126.67 Z (11,10) = 126.67 Z (11,11) = 126.67
Z (11,12) = 126.67 Z (11,13) = 126.67 Z (12, 1) = 100.00
Z (12, 2) = 100.00 Z (12, 3) = 100.00 Z (12, 4) = 100.00
Z (12, 5) = 103.33 Z (12, 6) = 110.00 Z (12, 7) = 116.67
Z (12, 8) = 120.00 Z (12, 9) = 120.00 Z (12,10) = 120.00
Z (12,11) = 120.00 Z (12,12) = 120.00 Z (12,13) = 120.00
Z (13, 1) = 100.00 Z (13, 2) = 100.00 Z (13, 3) = 100.00
Z (13, 4) = 100.00 Z (13, 5) = 100.00 Z (13, 6) = 103.33
Z (13, 7) = 110.00 Z (13, 8) = 113.33 Z (13, 9) = 113.33
Z (13,10) = 113.33 Z (13,11) = 113.33 Z (13,12) = 113.33
Z (13,13) = 113.33 Z (14, 1) = 100.00 Z (14, 2) = 100.00
Z (14, 3) = 100.00 Z (14, 4) = 100.00 Z (14, 5) = 100.00
Z (14, 6) = 100.00 Z (14, 7) = 103.33 Z (14, 8) = 106.67
Z (14, 9) = 106.67 Z (14,10) = 106.67 Z (14,11) = 106.67
Z (14,12) = 106.67 Z (14,13) = 106.67 Z (15, 1) = 100.00
Z (15, 2) = 100.00 Z (15, 3) = 100.00 Z (15, 4) = 100.00
Z (15, 5) = 100.00 Z (15, 6) = 100.00 Z (15, 7) = 100.00
Z (15, 8) = 100.00 Z (15, 9) = 100.00 Z (15,10) = 100.00
Z (15,11) = 100.00 Z (15,12) = 100.00 Z (15,13) = 100.00

BOUNDARIES FOR GENERATION IN THE Y DIRECTION :

Main Axis of Sliding was stablished at X = 180.00

Minimum point for initiation of polygonals at Y = 20.00
Interval for initiation of polygonals is = 40.00
Minimum point for termination of polygonals at Y = 110.00
Interval for termination of polygonals is = 60.00

BOUNDARIES FOR GENERATION IN THE X DIRECTION :

Coordinate Y = .00
Minimum point for initiation of polygonals at X = 120.00
Interval for initiation of polygonals is = 40.00
Minimum point for termination of polygonals at X = 200.00
Interval for termination of polygonals is = 40.00

Coordinate Y = 20.00
Minimum point for initiation of polygonals at X = 120.00
Interval for initiation of polygonals is = 40.00
Minimum point for termination of polygonals at X = 200.00
Interval for termination of polygonals is = 40.00

Coordinate Y = 40.00
Minimum point for initiation of polygonals at X = 120.00
Interval for initiation of polygonals is = 40.00
Minimum point for termination of polygonals at X = 200.00
Interval for termination of polygonals is = 40.00

Coordinate Y = 60.00
Minimum point for initiation of polygonals at X = 100.00
Interval for initiation of polygonals is = 40.00
Minimum point for termination of polygonals at X = 220.00
Interval for termination of polygonals is = 40.00

Coordinate Y = 80.00
Minimum point for initiation of polygonals at X = 100.00
Interval for initiation of polygonals is = 40.00
Minimum point for termination of polygonals at X = 220.00
Interval for termination of polygonals is = 40.00

Coordinate Y = 100.00
Minimum point for initiation of polygonals at X = 100.00
Interval for initiation of polygonals is = 40.00
Minimum point for termination of polygonals at X = 220.00
Interval for termination of polygonals is = 40.00

Coordinate Y = 120.00
Minimum point for initiation of polygonals at X = 100.00
Interval for initiation of polygonals is = 40.00
Minimum point for termination of polygonals at X = 220.00
Interval for termination of polygonals is = 40.00

Coordinate Y = 130.00
Minimum point for initiation of polygonals at X = 100.00
Interval for initiation of polygonals is = 40.00
Minimum point for termination of polygonals at X = 220.00
Interval for termination of polygonals is = 40.00

Coordinate Y = 140.00
Minimum point for initiation of polygonals at X = 100.00
Interval for initiation of polygonals is = 40.00
Minimum point for termination of polygonals at X = 220.00
Interval for termination of polygonals is = 40.00

Coordinate Y = 160.00
Minimum point for initiation of polygonals at X = 120.00
Interval for initiation of polygonals is = 40.00
Minimum point for termination of polygonals at X = 200.00
Interval for termination of polygonals is = 40.00

Coordinate Y = 180.00
Minimum point for initiation of polygonals at X = 120.00
Interval for initiation of polygonals is = 40.00
Minimum point for termination of polygonals at X = 200.00
Interval for termination of polygonals is = 40.00

Coordinate Y = 200.00
Minimum point for initiation of polygonals at X = 120.00
Interval for initiation of polygonals is = 40.00
Minimum point for termination of polygonals at X = 200.00
Interval for termination of polygonals is = 40.00

Coordinate Y = 230.00
Minimum point for initiation of polygonals at X = 120.00
Interval for initiation of polygonals is = 40.00
Minimum point for termination of polygonals at X = 200.00
Interval for termination of polygonals is = 40.00

BOUNDARIES FOR GENERATION IN THE Z DIRECTION :

Zmin(1, 1) = 79.00 Delta Z(1, 1) = 20.00
Zmin(1, 2) = 79.00 Delta Z(1, 2) = 20.00
Zmin(1, 3) = 79.00 Delta Z(1, 3) = 20.00
Zmin(1, 4) = 79.00 Delta Z(1, 4) = 20.00
Zmin(1, 5) = 79.00 Delta Z(1, 5) = 20.00
Zmin(1, 6) = 79.00 Delta Z(1, 6) = 20.00
Zmin(1, 7) = 79.00 Delta Z(1, 7) = 20.00
Zmin(1, 8) = 79.00 Delta Z(1, 8) = 20.00
Zmin(1, 9) = 79.00 Delta Z(1, 9) = 20.00
Zmin(1,10) = 79.00 Delta Z(1,10) = 20.00
Zmin(1,11) = 79.00 Delta Z(1,11) = 20.00
Zmin(1,12) = 79.00 Delta Z(1,12) = 20.00
Zmin(1,13) = 79.00 Delta Z(1,13) = 20.00

Zmin(2, 1) =	79.00	Delta Z(2, 1) =	20.00
Zmin(2, 2) =	79.00	Delta Z(2, 2) =	20.00
Zmin(2, 3) =	79.00	Delta Z(2, 3) =	20.00
Zmin(2, 4) =	79.00	Delta Z(2, 4) =	20.00
Zmin(2, 5) =	79.00	Delta Z(2, 5) =	20.00
Zmin(2, 6) =	79.00	Delta Z(2, 6) =	20.00
Zmin(2, 7) =	79.00	Delta Z(2, 7) =	21.00
Zmin(2, 8) =	79.00	Delta Z(2, 8) =	24.00
Zmin(2, 9) =	79.00	Delta Z(2, 9) =	24.00
Zmin(2,10) =	79.00	Delta Z(2,10) =	24.00
Zmin(2,11) =	79.00	Delta Z(2,11) =	24.00
Zmin(2,12) =	79.00	Delta Z(2,12) =	24.00
Zmin(2,13) =	79.00	Delta Z(2,13) =	24.00
Zmin(3, 1) =	79.00	Delta Z(3, 1) =	20.00
Zmin(3, 2) =	79.00	Delta Z(3, 2) =	20.00
Zmin(3, 3) =	79.00	Delta Z(3, 3) =	20.00
Zmin(3, 4) =	79.00	Delta Z(3, 4) =	20.00
Zmin(3, 5) =	79.00	Delta Z(3, 5) =	20.00
Zmin(3, 6) =	79.00	Delta Z(3, 6) =	22.00
Zmin(3, 7) =	79.00	Delta Z(3, 7) =	25.00
Zmin(3, 8) =	79.00	Delta Z(3, 8) =	30.00
Zmin(3, 9) =	79.00	Delta Z(3, 9) =	30.00
Zmin(3,10) =	79.00	Delta Z(3,10) =	30.00
Zmin(3,11) =	79.00	Delta Z(3,11) =	30.00
Zmin(3,12) =	79.00	Delta Z(3,12) =	30.00
Zmin(3,13) =	79.00	Delta Z(3,13) =	30.00
Zmin(4, 1) =	79.00	Delta Z(4, 1) =	20.00
Zmin(4, 2) =	79.00	Delta Z(4, 2) =	20.00
Zmin(4, 3) =	79.00	Delta Z(4, 3) =	20.00
Zmin(4, 4) =	79.00	Delta Z(4, 4) =	20.00
Zmin(4, 5) =	79.00	Delta Z(4, 5) =	22.00
Zmin(4, 6) =	79.00	Delta Z(4, 6) =	25.00
Zmin(4, 7) =	79.00	Delta Z(4, 7) =	32.00
Zmin(4, 8) =	79.00	Delta Z(4, 8) =	35.00
Zmin(4, 9) =	79.00	Delta Z(4, 9) =	35.00
Zmin(4,10) =	79.00	Delta Z(4,10) =	35.00
Zmin(4,11) =	79.00	Delta Z(4,11) =	35.00
Zmin(4,12) =	79.00	Delta Z(4,12) =	35.00
Zmin(4,13) =	79.00	Delta Z(4,13) =	35.00
Zmin(5, 1) =	79.00	Delta Z(5, 1) =	20.00
Zmin(5, 2) =	79.00	Delta Z(5, 2) =	20.00
Zmin(5, 3) =	79.00	Delta Z(5, 3) =	20.00
Zmin(5, 4) =	79.00	Delta Z(5, 4) =	22.00
Zmin(5, 5) =	79.00	Delta Z(5, 5) =	25.00
Zmin(5, 6) =	79.00	Delta Z(5, 6) =	30.00
Zmin(5, 7) =	79.00	Delta Z(5, 7) =	35.00
Zmin(5, 8) =	79.00	Delta Z(5, 8) =	35.00
Zmin(5, 9) =	79.00	Delta Z(5, 9) =	35.00
Zmin(5,10) =	79.00	Delta Z(5,10) =	35.00
Zmin(5,11) =	79.00	Delta Z(5,11) =	35.00
Zmin(5,12) =	79.00	Delta Z(5,12) =	35.00
Zmin(5,13) =	79.00	Delta Z(5,13) =	35.00
Zmin(6, 1) =	79.00	Delta Z(6, 1) =	20.00
Zmin(6, 2) =	79.00	Delta Z(6, 2) =	20.00
Zmin(6, 3) =	79.00	Delta Z(6, 3) =	20.00
Zmin(6, 4) =	79.00	Delta Z(6, 4) =	25.00
Zmin(6, 5) =	79.00	Delta Z(6, 5) =	30.00
Zmin(6, 6) =	79.00	Delta Z(6, 6) =	35.00

Zmin(6, 7) = 79.00 Delta Z(6, 7) = 40.00
Zmin(6, 8) = 79.00 Delta Z(6, 8) = 45.00
Zmin(6, 9) = 79.00 Delta Z(6, 9) = 45.00
Zmin(6,10) = 79.00 Delta Z(6,10) = 45.00
Zmin(6,11) = 79.00 Delta Z(6,11) = 45.00
Zmin(6,12) = 79.00 Delta Z(6,12) = 45.00
Zmin(6,13) = 79.00 Delta Z(6,13) = 45.00
Zmin(7, 1) = 79.00 Delta Z(7, 1) = 20.00
Zmin(7, 2) = 79.00 Delta Z(7, 2) = 20.00
Zmin(7, 3) = 79.00 Delta Z(7, 3) = 20.00
Zmin(7, 4) = 79.00 Delta Z(7, 4) = 25.00
Zmin(7, 5) = 79.00 Delta Z(7, 5) = 30.00
Zmin(7, 6) = 79.00 Delta Z(7, 6) = 35.00
Zmin(7, 7) = 79.00 Delta Z(7, 7) = 40.00
Zmin(7, 8) = 79.00 Delta Z(7, 8) = 45.00
Zmin(7, 9) = 79.00 Delta Z(7, 9) = 45.00
Zmin(7,10) = 79.00 Delta Z(7,10) = 45.00
Zmin(7,11) = 79.00 Delta Z(7,11) = 45.00
Zmin(7,12) = 79.00 Delta Z(7,12) = 45.00
Zmin(7,13) = 79.00 Delta Z(7,13) = 45.00
Zmin(8, 1) = 79.00 Delta Z(8, 1) = 20.00
Zmin(8, 2) = 79.00 Delta Z(8, 2) = 20.00
Zmin(8, 3) = 79.00 Delta Z(8, 3) = 20.00
Zmin(8, 4) = 79.00 Delta Z(8, 4) = 25.00
Zmin(8, 5) = 79.00 Delta Z(8, 5) = 30.00
Zmin(8, 6) = 79.00 Delta Z(8, 6) = 35.00
Zmin(8, 7) = 79.00 Delta Z(8, 7) = 40.00
Zmin(8, 8) = 79.00 Delta Z(8, 8) = 45.00
Zmin(8, 9) = 79.00 Delta Z(8, 9) = 45.00
Zmin(8,10) = 79.00 Delta Z(8,10) = 45.00
Zmin(8,11) = 79.00 Delta Z(8,11) = 45.00
Zmin(8,12) = 79.00 Delta Z(8,12) = 45.00
Zmin(8,13) = 79.00 Delta Z(8,13) = 45.00
Zmin(9, 1) = 79.00 Delta Z(9, 1) = 20.00
Zmin(9, 2) = 79.00 Delta Z(9, 2) = 20.00
Zmin(9, 3) = 79.00 Delta Z(9, 3) = 20.00
Zmin(9, 4) = 79.00 Delta Z(9, 4) = 25.00
Zmin(9, 5) = 79.00 Delta Z(9, 5) = 30.00
Zmin(9, 6) = 79.00 Delta Z(9, 6) = 35.00
Zmin(9, 7) = 79.00 Delta Z(9, 7) = 40.00
Zmin(9, 8) = 79.00 Delta Z(9, 8) = 45.00
Zmin(9, 9) = 79.00 Delta Z(9, 9) = 45.00
Zmin(9,10) = 79.00 Delta Z(9,10) = 45.00
Zmin(9,11) = 79.00 Delta Z(9,11) = 45.00
Zmin(9,12) = 79.00 Delta Z(9,12) = 45.00
Zmin(9,13) = 79.00 Delta Z(9,13) = 45.00
Zmin(10, 1) = 79.00 Delta Z(10, 1) = 20.00
Zmin(10, 2) = 79.00 Delta Z(10, 2) = 20.00
Zmin(10, 3) = 79.00 Delta Z(10, 3) = 20.00
Zmin(10, 4) = 79.00 Delta Z(10, 4) = 25.00
Zmin(10, 5) = 79.00 Delta Z(10, 5) = 30.00
Zmin(10, 6) = 79.00 Delta Z(10, 6) = 35.00
Zmin(10, 7) = 79.00 Delta Z(10, 7) = 40.00
Zmin(10, 8) = 79.00 Delta Z(10, 8) = 45.00
Zmin(10, 9) = 79.00 Delta Z(10, 9) = 45.00
Zmin(10,10) = 79.00 Delta Z(10,10) = 45.00
Zmin(10,11) = 79.00 Delta Z(10,11) = 45.00
Zmin(10,12) = 79.00 Delta Z(10,12) = 45.00

Zmin(10,13) = 79.00 Delta Z(10,13) = 45.00
Zmin(11, 1) = 79.00 Delta Z(11, 1) = 20.00
Zmin(11, 2) = 79.00 Delta Z(11, 2) = 20.00
Zmin(11, 3) = 79.00 Delta Z(11, 3) = 20.00
Zmin(11, 4) = 79.00 Delta Z(11, 4) = 22.00
Zmin(11, 5) = 79.00 Delta Z(11, 5) = 25.00
Zmin(11, 6) = 79.00 Delta Z(11, 6) = 30.00
Zmin(11, 7) = 79.00 Delta Z(11, 7) = 35.00
Zmin(11, 8) = 79.00 Delta Z(11, 8) = 35.00
Zmin(11, 9) = 79.00 Delta Z(11, 9) = 35.00
Zmin(11,10) = 79.00 Delta Z(11,10) = 35.00
Zmin(11,11) = 79.00 Delta Z(11,11) = 35.00
Zmin(11,12) = 79.00 Delta Z(11,12) = 35.00
Zmin(11,13) = 79.00 Delta Z(11,13) = 35.00
Zmin(12, 1) = 79.00 Delta Z(12, 1) = 20.00
Zmin(12, 2) = 79.00 Delta Z(12, 2) = 20.00
Zmin(12, 3) = 79.00 Delta Z(12, 3) = 20.00
Zmin(12, 4) = 79.00 Delta Z(12, 4) = 20.00
Zmin(12, 5) = 79.00 Delta Z(12, 5) = 22.00
Zmin(12, 6) = 79.00 Delta Z(12, 6) = 25.00
Zmin(12, 7) = 79.00 Delta Z(12, 7) = 32.00
Zmin(12, 8) = 79.00 Delta Z(12, 8) = 35.00
Zmin(12, 9) = 79.00 Delta Z(12, 9) = 35.00
Zmin(12,10) = 79.00 Delta Z(12,10) = 35.00
Zmin(12,11) = 79.00 Delta Z(12,11) = 35.00
Zmin(12,12) = 79.00 Delta Z(12,12) = 35.00
Zmin(12,13) = 79.00 Delta Z(12,13) = 35.00
Zmin(13, 1) = 79.00 Delta Z(13, 1) = 20.00
Zmin(13, 2) = 79.00 Delta Z(13, 2) = 20.00
Zmin(13, 3) = 79.00 Delta Z(13, 3) = 20.00
Zmin(13, 4) = 79.00 Delta Z(13, 4) = 20.00
Zmin(13, 5) = 79.00 Delta Z(13, 5) = 20.00
Zmin(13, 6) = 79.00 Delta Z(13, 6) = 22.00
Zmin(13, 7) = 79.00 Delta Z(13, 7) = 25.00
Zmin(13, 8) = 79.00 Delta Z(13, 8) = 30.00
Zmin(13, 9) = 79.00 Delta Z(13, 9) = 30.00
Zmin(13,10) = 79.00 Delta Z(13,10) = 30.00
Zmin(13,11) = 79.00 Delta Z(13,11) = 30.00
Zmin(13,12) = 79.00 Delta Z(13,12) = 30.00
Zmin(13,13) = 79.00 Delta Z(13,13) = 30.00
Zmin(14, 1) = 79.00 Delta Z(14, 1) = 20.00
Zmin(14, 2) = 79.00 Delta Z(14, 2) = 20.00
Zmin(14, 3) = 79.00 Delta Z(14, 3) = 20.00
Zmin(14, 4) = 79.00 Delta Z(14, 4) = 20.00
Zmin(14, 5) = 79.00 Delta Z(14, 5) = 20.00
Zmin(14, 6) = 79.00 Delta Z(14, 6) = 20.00
Zmin(14, 7) = 79.00 Delta Z(14, 7) = 21.00
Zmin(14, 8) = 79.00 Delta Z(14, 8) = 24.00
Zmin(14, 9) = 79.00 Delta Z(14, 9) = 24.00
Zmin(14,10) = 79.00 Delta Z(14,10) = 24.00
Zmin(14,11) = 79.00 Delta Z(14,11) = 24.00
Zmin(14,12) = 79.00 Delta Z(14,12) = 24.00
Zmin(14,13) = 79.00 Delta Z(14,13) = 24.00
Zmin(15, 1) = 79.00 Delta Z(15, 1) = 20.00
Zmin(15, 2) = 79.00 Delta Z(15, 2) = 20.00
Zmin(15, 3) = 79.00 Delta Z(15, 3) = 20.00
Zmin(15, 4) = 79.00 Delta Z(15, 4) = 20.00
Zmin(15, 5) = 79.00 Delta Z(15, 5) = 20.00

Zmin(15, 6) = 79.00 Delta Z(15, 6) = 20.00
Zmin(15, 7) = 79.00 Delta Z(15, 7) = 20.00
Zmin(15, 8) = 79.00 Delta Z(15, 8) = 20.00
Zmin(15, 9) = 79.00 Delta Z(15, 9) = 20.00
Zmin(15,10) = 79.00 Delta Z(15,10) = 20.00
Zmin(15,11) = 79.00 Delta Z(15,11) = 20.00
Zmin(15,12) = 79.00 Delta Z(15,12) = 20.00
Zmin(15,13) = 79.00 Delta Z(15,13) = 20.00

SOIL PROPERTIES :

Soil	Unit Weight	Cohesion	Shear Angle
1	110.00	100.0	28.0

Ru of soil # 1 = .00

TEN MOST CRITICAL SURFACES :

SURFACE # 1

Coordinate X	Coordinate Y	Coordinate Z
180.000	40.307	.000
148.097	60.000	370.244
160.000	60.000	84.276
180.000	60.000	82.207
200.000	60.000	84.276
211.903	60.000	529.756
121.131	80.000	302.828
130.000	80.000	84.292
160.000	80.000	80.698
180.000	80.000	79.154
200.000	80.000	80.698
230.000	80.000	84.292
238.869	80.000	597.172
113.743	100.000	284.358
120.000	100.000	101.000
130.000	100.000	104.000
160.000	100.000	93.758
180.000	100.000	87.428
200.000	100.000	93.758
230.000	100.000	104.000
240.000	100.000	101.000
246.257	100.000	615.642
117.008	120.000	292.519
120.000	120.000	104.000
130.000	120.000	109.000
160.000	120.000	109.000
180.000	120.000	103.140
200.000	120.000	109.000
230.000	120.000	109.000
240.000	120.000	104.000
242.992	120.000	607.481

119.850	130.000	299.626
120.000	130.000	109.000
130.000	130.000	114.000
160.000	130.000	114.000
180.000	130.000	114.000
200.000	130.000	114.000
230.000	130.000	114.000
240.000	130.000	109.000
240.150	130.000	600.374
132.629	140.000	331.574
160.000	140.000	119.000
180.000	140.000	119.000
200.000	140.000	119.000
227.371	140.000	568.426
180.000	152.146	.000

Factor of Safety = 1.603

SURFACE # 2

Coordinate X	Coordinate Y	Coordinate Z
180.000	40.307	.000
148.097	60.000	370.244
160.000	60.000	84.276
180.000	60.000	82.207
200.000	60.000	84.276
211.903	60.000	529.756
121.131	80.000	302.828
130.000	80.000	84.292
160.000	80.000	80.698
180.000	80.000	79.154
200.000	80.000	80.698
230.000	80.000	84.292
238.869	80.000	597.172
113.743	100.000	284.358
120.000	100.000	101.000
130.000	100.000	104.000
160.000	100.000	93.758
180.000	100.000	87.428
200.000	100.000	93.758
230.000	100.000	104.000
240.000	100.000	101.000
246.257	100.000	615.642
117.008	120.000	292.519
120.000	120.000	104.000
130.000	120.000	109.000
160.000	120.000	109.000
180.000	120.000	103.140
200.000	120.000	109.000
230.000	120.000	109.000
240.000	120.000	104.000
242.992	120.000	607.481
119.850	130.000	299.626
120.000	130.000	109.000
130.000	130.000	114.000
160.000	130.000	114.000

180.000	130.000	114.000
200.000	130.000	114.000
230.000	130.000	114.000
240.000	130.000	109.000
240.150	130.000	600.374
132.629	140.000	331.574
160.000	140.000	119.000
180.000	140.000	119.000
200.000	140.000	119.000
227.371	140.000	568.426
180.000	152.146	.000

Factor of Safety = 1.603

SURFACE # 3

Coordinate X	Coordinate Y	Coordinate Z
180.000	40.307	.000
148.097	60.000	370.244
160.000	60.000	84.276
180.000	60.000	82.207
200.000	60.000	84.276
211.903	60.000	529.756
121.131	80.000	302.828
130.000	80.000	84.292
160.000	80.000	80.698
180.000	80.000	79.154
200.000	80.000	80.698
230.000	80.000	84.292
238.869	80.000	597.172
113.743	100.000	284.358
120.000	100.000	101.000
130.000	100.000	104.000
160.000	100.000	93.758
180.000	100.000	87.428
200.000	100.000	93.758
230.000	100.000	104.000
240.000	100.000	101.000
246.257	100.000	615.642
117.008	120.000	292.519
120.000	120.000	104.000
130.000	120.000	109.000
160.000	120.000	109.000
180.000	120.000	103.140
200.000	120.000	109.000
230.000	120.000	109.000
240.000	120.000	104.000
242.992	120.000	607.481
119.850	130.000	299.626
120.000	130.000	109.000
130.000	130.000	114.000
160.000	130.000	114.000
180.000	130.000	114.000
200.000	130.000	114.000
230.000	130.000	114.000
240.000	130.000	109.000

240.150	130.000	600.374
132.629	140.000	331.574
160.000	140.000	119.000
180.000	140.000	119.000
200.000	140.000	119.000
227.371	140.000	568.426
180.000	152.146	.000

Factor of Safety = 1.603

SURFACE # 4

Coordinate X	Coordinate Y	Coordinate Z
180.000	40.307	.000
148.097	60.000	370.244
160.000	60.000	84.276
180.000	60.000	82.207
200.000	60.000	84.276
211.903	60.000	529.756
121.131	80.000	302.828
130.000	80.000	84.292
160.000	80.000	80.698
180.000	80.000	79.154
200.000	80.000	80.698
230.000	80.000	84.292
238.869	80.000	597.172
113.743	100.000	284.358
120.000	100.000	101.000
130.000	100.000	104.000
160.000	100.000	93.758
180.000	100.000	87.428
200.000	100.000	93.758
230.000	100.000	104.000
240.000	100.000	101.000
246.257	100.000	615.642
117.008	120.000	292.519
120.000	120.000	104.000
130.000	120.000	109.000
160.000	120.000	109.000
180.000	120.000	103.140
200.000	120.000	109.000
230.000	120.000	109.000
240.000	120.000	104.000
242.992	120.000	607.481
119.850	130.000	299.626
120.000	130.000	109.000
130.000	130.000	114.000
160.000	130.000	114.000
180.000	130.000	114.000
200.000	130.000	114.000
230.000	130.000	114.000
240.000	130.000	109.000
240.150	130.000	600.374
132.629	140.000	331.574
160.000	140.000	119.000
180.000	140.000	119.000

200.000	140.000	119.000
227.371	140.000	568.426
180.000	152.146	.000

Factor of Safety = 1.603

SURFACE # 5

Coordinate X	Coordinate Y	Coordinate Z
180.000	40.370	.000
138.225	60.000	345.562
160.000	60.000	95.803
180.000	60.000	95.549
200.000	60.000	95.803
221.775	60.000	554.438
125.056	80.000	312.640
130.000	80.000	84.907
160.000	80.000	82.613
180.000	80.000	82.346
200.000	80.000	82.613
230.000	80.000	84.907
234.944	80.000	587.360
114.484	100.000	286.209
120.000	100.000	101.000
130.000	100.000	104.000
160.000	100.000	92.738
180.000	100.000	84.590
200.000	100.000	92.738
230.000	100.000	104.000
240.000	100.000	101.000
245.516	100.000	613.791
116.914	120.000	292.284
120.000	120.000	104.000
130.000	120.000	108.457
160.000	120.000	104.945
180.000	120.000	103.570
200.000	120.000	104.945
230.000	120.000	108.457
240.000	120.000	104.000
243.086	120.000	607.716
118.573	130.000	296.433
120.000	130.000	109.000
130.000	130.000	114.000
160.000	130.000	114.000
180.000	130.000	114.000
200.000	130.000	114.000
230.000	130.000	114.000
240.000	130.000	109.000
241.427	130.000	603.567
180.000	137.337	.000

Factor of Safety = 1.819

SURFACE # 6

Coordinate X	Coordinate Y	Coordinate Z
180.000	40.370	.000
138.225	60.000	345.562
160.000	60.000	95.803
180.000	60.000	95.549
200.000	60.000	95.803
221.775	60.000	554.438
125.056	80.000	312.640
130.000	80.000	84.907
160.000	80.000	82.613
180.000	80.000	82.346
200.000	80.000	82.613
230.000	80.000	84.907
234.944	80.000	587.360
114.484	100.000	286.209
120.000	100.000	101.000
130.000	100.000	104.000
160.000	100.000	92.738
180.000	100.000	84.590
200.000	100.000	92.738
230.000	100.000	104.000
240.000	100.000	101.000
245.516	100.000	613.791
116.914	120.000	292.284
120.000	120.000	104.000
130.000	120.000	108.457
160.000	120.000	104.945
180.000	120.000	103.570
200.000	120.000	104.945
230.000	120.000	108.457
240.000	120.000	104.000
243.086	120.000	607.716
118.573	130.000	296.433
120.000	130.000	109.000
130.000	130.000	114.000
160.000	130.000	114.000
180.000	130.000	114.000
200.000	130.000	114.000
230.000	130.000	114.000
240.000	130.000	109.000
241.427	130.000	603.567
180.000	137.337	.000

Factor of Safety = 1.819

SURFACE # 7

Coordinate X	Coordinate Y	Coordinate Z
180.000	40.370	.000
138.225	60.000	345.562
160.000	60.000	95.803
180.000	60.000	95.549
200.000	60.000	95.803
221.775	60.000	554.438
125.056	80.000	312.640

130.000	80.000	84.907
160.000	80.000	82.613
180.000	80.000	82.346
200.000	80.000	82.613
230.000	80.000	84.907
234.944	80.000	587.360
114.484	100.000	286.209
120.000	100.000	101.000
130.000	100.000	104.000
160.000	100.000	92.738
180.000	100.000	84.590
200.000	100.000	92.738
230.000	100.000	104.000
240.000	100.000	101.000
245.516	100.000	613.791
116.914	120.000	292.284
120.000	120.000	104.000
130.000	120.000	108.457
160.000	120.000	104.945
180.000	120.000	103.570
200.000	120.000	104.945
230.000	120.000	108.457
240.000	120.000	104.000
243.086	120.000	607.716
118.573	130.000	296.433
120.000	130.000	109.000
130.000	130.000	114.000
160.000	130.000	114.000
180.000	130.000	114.000
200.000	130.000	114.000
230.000	130.000	114.000
240.000	130.000	109.000
241.427	130.000	603.567
180.000	137.337	.000

Factor of Safety = 1.819

SURFACE # 8

Coordinate X	Coordinate Y	Coordinate Z
180.000	40.370	.000
138.225	60.000	345.562
160.000	60.000	95.803
180.000	60.000	95.549
200.000	60.000	95.803
221.775	60.000	554.438
125.056	80.000	312.640
130.000	80.000	84.907
160.000	80.000	82.613
180.000	80.000	82.346
200.000	80.000	82.613
230.000	80.000	84.907
234.944	80.000	587.360
114.484	100.000	286.209
120.000	100.000	101.000
130.000	100.000	104.000

160.000	100.000	92.738
180.000	100.000	84.590
200.000	100.000	92.738
230.000	100.000	104.000
240.000	100.000	101.000
245.516	100.000	613.791
116.914	120.000	292.284
120.000	120.000	104.000
130.000	120.000	108.457
160.000	120.000	104.945
180.000	120.000	103.570
200.000	120.000	104.945
230.000	120.000	108.457
240.000	120.000	104.000
243.086	120.000	607.716
118.573	130.000	296.433
120.000	130.000	109.000
130.000	130.000	114.000
160.000	130.000	114.000
180.000	130.000	114.000
200.000	130.000	114.000
230.000	130.000	114.000
240.000	130.000	109.000
241.427	130.000	603.567
180.000	137.337	.000

Factor of Safety = 1.819

SURFACE # 9

Coordinate X	Coordinate Y	Coordinate Z
180.000	40.370	.000
138.225	60.000	345.562
160.000	60.000	95.803
180.000	60.000	95.549
200.000	60.000	95.803
221.775	60.000	554.438
125.056	80.000	312.640
130.000	80.000	84.907
160.000	80.000	82.613
180.000	80.000	82.346
200.000	80.000	82.613
230.000	80.000	84.907
234.944	80.000	587.360
114.484	100.000	286.209
120.000	100.000	101.000
130.000	100.000	104.000
160.000	100.000	92.738
180.000	100.000	84.590
200.000	100.000	92.738
230.000	100.000	104.000
240.000	100.000	101.000
245.516	100.000	613.791
116.914	120.000	292.284
120.000	120.000	104.000
130.000	120.000	108.457

160.000	120.000	104.945
180.000	120.000	103.570
200.000	120.000	104.945
230.000	120.000	108.457
240.000	120.000	104.000
243.086	120.000	607.716
118.573	130.000	296.433
120.000	130.000	109.000
130.000	130.000	114.000
160.000	130.000	114.000
180.000	130.000	114.000
200.000	130.000	114.000
230.000	130.000	114.000
240.000	130.000	109.000
241.427	130.000	603.567
180.000	137.337	.000

Factor of Safety = 1.819

SURFACE # 10

Coordinate X	Coordinate Y	Coordinate Z
180.000	46.742	.000
153.769	60.000	384.422
160.000	60.000	94.802
180.000	60.000	91.850
200.000	60.000	94.802
206.231	60.000	515.578
125.274	80.000	313.185
130.000	80.000	90.641
160.000	80.000	83.934
180.000	80.000	83.876
200.000	80.000	83.934
230.000	80.000	90.641
234.726	80.000	586.815
117.769	100.000	294.422
120.000	100.000	101.000
130.000	100.000	101.471
160.000	100.000	88.691
180.000	100.000	87.211
200.000	100.000	88.691
230.000	100.000	101.471
240.000	100.000	101.000
242.231	100.000	605.578
118.093	120.000	295.233
120.000	120.000	104.000
130.000	120.000	107.775
160.000	120.000	103.387
180.000	120.000	103.381
200.000	120.000	103.387
230.000	120.000	107.775
240.000	120.000	104.000
241.907	120.000	604.767
119.407	130.000	298.518
120.000	130.000	109.000
130.000	130.000	114.000

160.000	130.000	114.000
180.000	130.000	111.598
200.000	130.000	114.000
230.000	130.000	114.000
240.000	130.000	109.000
240.593	130.000	601.482
129.127	140.000	322.818
130.000	140.000	119.000
160.000	140.000	119.000
180.000	140.000	119.000
200.000	140.000	119.000
230.000	140.000	119.000
230.873	140.000	577.182
140.000	160.000	350.000
160.000	160.000	124.000
180.000	160.000	124.000
200.000	160.000	124.000
220.000	160.000	550.000
180.000	160.653	.000

Factor of Safety = 1.923

Example 4

Geometry of the Example 4 is shown on Figure B4. The following soil parameters were used:

Unit weight of soil	110 pcf
Cohesion	100 psf
Friction angle	28 deg .

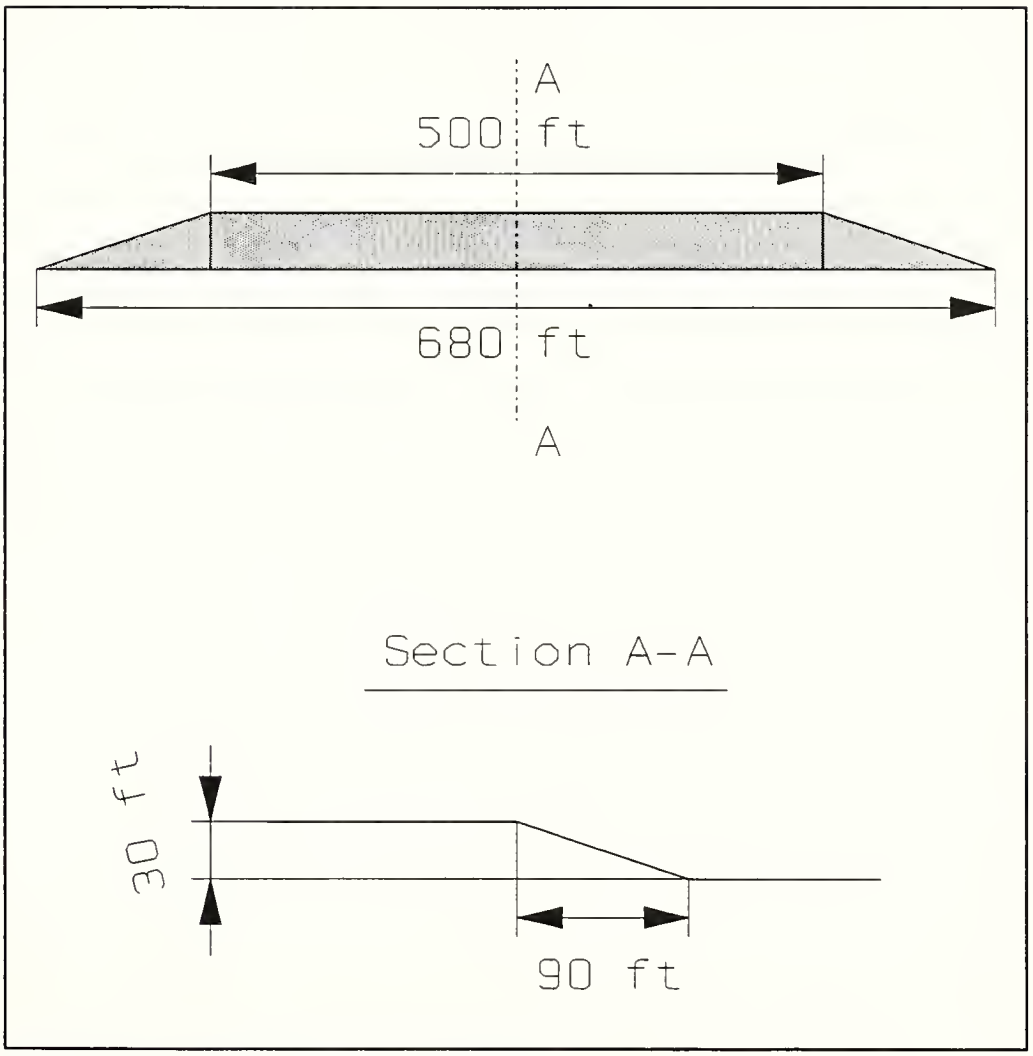

Figure B4 Illustartion for Example 4

```
PCSTBL3D Version 2.0
 15          13
 1
 40  60  80  100  120  130  160  180  200  230  240  260  280  300  320
 0  20  40  60  80  100  120  130  140  160  180  200  230
 100  100  100  106.67  113.33  120  126.67  130  130  130  130  130  130
 100  100  100  106.67  113.33  120  126.67  130  130  130  130  130  130
 100  100  100  106.67  113.33  120  126.67  130  130  130  130  130  130
 100  100  100  106.67  113.33  120  126.67  130  130  130  130  130  130
 100  100  100  106.67  113.33  120  126.67  130  130  130  130  130  130
 100  100  100  106.67  113.33  120  126.67  130  130  130  130  130  130
 100  100  100  106.67  113.33  120  126.67  130  130  130  130  130  130
 100  100  100  106.67  113.33  120  126.67  130  130  130  130  130  130
 100  100  100  106.67  113.33  120  126.67  130  130  130  130  130  130
 100  100  100  106.67  113.33  120  126.67  130  130  130  130  130  130
 100  100  100  106.67  113.33  120  126.67  130  130  130  130  130  130
 100  100  100  106.67  113.33  120  126.67  130  130  130  130  130  130
 100  100  100  106.67  113.33  120  126.67  130  130  130  130  130  130
 8
 20  40  110  60
 120  40  200  40
 120  40  200  40
 120  40  200  40
 100  40  220  40
 100  40  220  40
 100  40  220  40
 100  40  220  40
 100  40  220  40
 100  40  220  40
 120  40  200  40
 120  40  200  40
 120  40  200  40
 120  40  200  40
 79  20  79  20  79  20  79  25  79  30  79  35  79  40  79  45  79  45  79  45  79  45  79  45  79  45
 79  20  79  20  79  20  79  25  79  30  79  35  79  40  79  45  79  45  79  45  79  45  79  45  79  45
 79  20  79  20  79  20  79  25  79  30  79  35  79  40  79  45  79  45  79  45  79  45  79  45  79  45
 79  20  79  20  79  20  79  25  79  30  79  35  79  40  79  45  79  45  79  45  79  45  79  45  79  45
 79  20  79  20  79  20  79  25  79  30  79  35  79  40  79  45  79  45  79  45  79  45  79  45  79  45
 79  20  79  20  79  20  79  25  79  30  79  35  79  40  79  45  79  45  79  45  79  45  79  45  79  45
 79  20  79  20  79  20  79  25  79  30  79  35  79  40  79  45  79  45  79  45  79  45  79  45  79  45
 79  20  79  20  79  20  79  25  79  30  79  35  79  40  79  45  79  45  79  45  79  45  79  45  79  45
 79  20  79  20  79  20  79  25  79  30  79  35  79  40  79  45  79  45  79  45  79  45  79  45  79  45
 79  20  79  20  79  20  79  25  79  30  79  35  79  40  79  45  79  45  79  45  79  45  79  45  79  45
 79  20  79  20  79  20  79  25  79  30  79  35  79  40  79  45  79  45  79  45  79  45  79  45  79  45
 79  20  79  20  79  20  79  25  79  30  79  35  79  40  79  45  79  45  79  45  79  45  79  45  79  45
 79  20  79  20  79  20  79  25  79  30  79  35  79  40  79  45  79  45  79  45  79  45  79  45  79  45
 110          100          28
 1
 0
```

```
*********************************************
*            PC-STABL3D             *
*  3-DIMENSIOANL SLOPE STABILITY PROGRAM  *
*       FROM PURDUE UNIVERSITY          *
*            VERSION 2.1               *
*********************************************

     Number of X coordinates :  15
     Number of Y coordinates :  13
     Number of soils :  1


     X COORDINATES :
     coordinate X(  1) =   40.00
     coordinate X(  2) =   60.00
     coordinate X(  3) =   80.00
     coordinate X(  4) =  100.00
     coordinate X(  5) =  120.00
     coordinate X(  6) =  130.00
     coordinate X(  7) =  160.00
     coordinate X(  8) =  180.00
     coordinate X(  9) =  200.00
     coordinate X( 10) =  230.00
     coordinate X( 11) =  240.00
     coordinate X( 12) =  260.00
     coordinate X( 13) =  280.00
     coordinate X( 14) =  300.00
     coordinate X( 15) =  320.00


     Y COORDINATES :
     coordinate Y(  1) =    .00
     coordinate Y(  2) =   20.00
     coordinate Y(  3) =   40.00
     coordinate Y(  4) =   60.00
     coordinate Y(  5) =   80.00
     coordinate Y(  6) =  100.00
     coordinate Y(  7) =  120.00
     coordinate Y(  8) =  130.00
     coordinate Y(  9) =  140.00
     coordinate Y( 10) =  160.00
     coordinate Y( 11) =  180.00
     coordinate Y( 12) =  200.00
     coordinate Y( 13) =  230.00

     COORDINATES Z FOR SOIL #  1

     Z ( 1, 1) =  100.00   Z ( 1, 2) =  100.00   Z ( 1, 3) =  100.00
     Z ( 1, 4) =  106.67   Z ( 1, 5) =  113.33   Z ( 1, 6) =  120.00
     Z ( 1, 7) =  126.67   Z ( 1, 8) =  130.00   Z ( 1, 9) =  130.00
     Z ( 1,10) =  130.00   Z ( 1,11) =  130.00   Z ( 1,12) =  130.00
     Z ( 1,13) =  130.00   Z ( 2, 1) =  100.00   Z ( 2, 2) =  100.00
     Z ( 2, 3) =  100.00   Z ( 2, 4) =  106.67   Z ( 2, 5) =  113.33
     Z ( 2, 6) =  120.00   Z ( 2, 7) =  126.67   Z ( 2, 8) =  130.00
     Z ( 2, 9) =  130.00   Z ( 2,10) =  130.00   Z ( 2,11) =  130.00
     Z ( 2,12) =  130.00   Z ( 2,13) =  130.00   Z ( 3, 1) =  100.00
     Z ( 3, 2) =  100.00   Z ( 3, 3) =  100.00   Z ( 3, 4) =  106.67
```

Z (3, 5) = 113.33 Z (3, 6) = 120.00 Z (3, 7) = 126.67
Z (3, 8) = 130.00 Z (3, 9) = 130.00 Z (3,10) = 130.00
Z (3,11) = 130.00 Z (3,12) = 130.00 Z (3,13) = 130.00
Z (4, 1) = 100.00 Z (4, 2) = 100.00 Z (4, 3) = 100.00
Z (4, 4) = 106.67 Z (4, 5) = 113.33 Z (4, 6) = 120.00
Z (4, 7) = 126.67 Z (4, 8) = 130.00 Z (4, 9) = 130.00
Z (4,10) = 130.00 Z (4,11) = 130.00 Z (4,12) = 130.00
Z (4,13) = 130.00 Z (5, 1) = 100.00 Z (5, 2) = 100.00
Z (5, 3) = 100.00 Z (5, 4) = 106.67 Z (5, 5) = 113.33
Z (5, 6) = 120.00 Z (5, 7) = 126.67 Z (5, 8) = 130.00
Z (5, 9) = 130.00 Z (5,10) = 130.00 Z (5,11) = 130.00
Z (5,12) = 130.00 Z (5,13) = 130.00 Z (6, 1) = 100.00
Z (6, 2) = 100.00 Z (6, 3) = 100.00 Z (6, 4) = 106.67
Z (6, 5) = 113.33 Z (6, 6) = 120.00 Z (6, 7) = 126.67
Z (6, 8) = 130.00 Z (6, 9) = 130.00 Z (6,10) = 130.00
Z (6,11) = 130.00 Z (6,12) = 130.00 Z (6,13) = 130.00
Z (7, 1) = 100.00 Z (7, 2) = 100.00 Z (7, 3) = 100.00
Z (7, 4) = 106.67 Z (7, 5) = 113.33 Z (7, 6) = 120.00
Z (7, 7) = 126.67 Z (7, 8) = 130.00 Z (7, 9) = 130.00
Z (7,10) = 130.00 Z (7,11) = 130.00 Z (7,12) = 130.00
Z (7,13) = 130.00 Z (8, 1) = 100.00 Z (8, 2) = 100.00
Z (8, 3) = 100.00 Z (8, 4) = 106.67 Z (8, 5) = 113.33
Z (8, 6) = 120.00 Z (8, 7) = 126.67 Z (8, 8) = 130.00
Z (8, 9) = 130.00 Z (8,10) = 130.00 Z (8,11) = 130.00
Z (8,12) = 130.00 Z (8,13) = 130.00 Z (9, 1) = 100.00
Z (9, 2) = 100.00 Z (9, 3) = 100.00 Z (9, 4) = 106.67
Z (9, 5) = 113.33 Z (9, 6) = 120.00 Z (9, 7) = 126.67
Z (9, 8) = 130.00 Z (9, 9) = 130.00 Z (9,10) = 130.00
Z (9,11) = 130.00 Z (9,12) = 130.00 Z (9,13) = 130.00
Z (10, 1) = 100.00 Z (10, 2) = 100.00 Z (10, 3) = 100.00
Z (10, 4) = 106.67 Z (10, 5) = 113.33 Z (10, 6) = 120.00
Z (10, 7) = 126.67 Z (10, 8) = 130.00 Z (10, 9) = 130.00
Z (10,10) = 130.00 Z (10,11) = 130.00 Z (10,12) = 130.00
Z (10,13) = 130.00 Z (11, 1) = 100.00 Z (11, 2) = 100.00
Z (11, 3) = 100.00 Z (11, 4) = 106.67 Z (11, 5) = 113.33
Z (11, 6) = 120.00 Z (11, 7) = 126.67 Z (11, 8) = 130.00
Z (11, 9) = 130.00 Z (11,10) = 130.00 Z (11,11) = 130.00
Z (11,12) = 130.00 Z (11,13) = 130.00 Z (12, 1) = 100.00
Z (12, 2) = 100.00 Z (12, 3) = 100.00 Z (12, 4) = 106.67
Z (12, 5) = 113.33 Z (12, 6) = 120.00 Z (12, 7) = 126.67
Z (12, 8) = 130.00 Z (12, 9) = 130.00 Z (12,10) = 130.00
Z (12,11) = 130.00 Z (12,12) = 130.00 Z (12,13) = 130.00
Z (13, 1) = 100.00 Z (13, 2) = 100.00 Z (13, 3) = 100.00
Z (13, 4) = 106.67 Z (13, 5) = 113.33 Z (13, 6) = 120.00
Z (13, 7) = 126.67 Z (13, 8) = 130.00 Z (13, 9) = 130.00
Z (13,10) = 130.00 Z (13,11) = 130.00 Z (13,12) = 130.00
Z (13,13) = 130.00 Z (14, 1) = 100.00 Z (14, 2) = 100.00
Z (14, 3) = 100.00 Z (14, 4) = 106.67 Z (14, 5) = 113.33
Z (14, 6) = 120.00 Z (14, 7) = 126.67 Z (14, 8) = 130.00
Z (14, 9) = 130.00 Z (14,10) = 130.00 Z (14,11) = 130.00
Z (14,12) = 130.00 Z (14,13) = 130.00 Z (15, 1) = 100.00
Z (15, 2) = 100.00 Z (15, 3) = 100.00 Z (15, 4) = 106.67
Z (15, 5) = 113.33 Z (15, 6) = 120.00 Z (15, 7) = 126.67
Z (15, 8) = 130.00 Z (15, 9) = 130.00 Z (15,10) = 130.00
Z (15,11) = 130.00 Z (15,12) = 130.00 Z (15,13) = 130.00

BOUNDARIES FOR GENERATION IN THE Y DIRECTION :

Main Axis of Sliding was stablished at X = 180.00

Minimum point for initiation of polygonals at Y = 20.00
Interval for initiation of polygonals is = 40.00
Minimum point for termination of polygonals at Y = 110.00
Interval for termination of polygonals is = 60.00

BOUNDARIES FOR GENERATION IN THE X DIRECTION :

Coordinate Y = .00
Minimum point for initiation of polygonals at X = 120.00
Interval for initiation of polygonals is = 40.00
Minimum point for termination of polygonals at X = 200.00
Interval for termination of polygonals is = 40.00

Coordinate Y = 20.00
Minimum point for initiation of polygonals at X = 120.00
Interval for initiation of polygonals is = 40.00
Minimum point for termination of polygonals at X = 200.00
Interval for termination of polygonals is = 40.00

Coordinate Y = 40.00
Minimum point for initiation of polygonals at X = 120.00
Interval for initiation of polygonals is = 40.00
Minimum point for termination of polygonals at X = 200.00
Interval for termination of polygonals is = 40.00

Coordinate Y = 60.00
Minimum point for initiation of polygonals at X = 100.00
Interval for initiation of polygonals is = 40.00
Minimum point for termination of polygonals at X = 220.00
Interval for termination of polygonals is = 40.00

Coordinate Y = 80.00
Minimum point for initiation of polygonals at X = 100.00
Interval for initiation of polygonals is = 40.00
Minimum point for termination of polygonals at X = 220.00
Interval for termination of polygonals is = 40.00

Coordinate Y = 100.00
Minimum point for initiation of polygonals at X = 100.00
Interval for initiation of polygonals is = 40.00
Minimum point for termination of polygonals at X = 220.00
Interval for termination of polygonals is = 40.00

Coordinate Y = 120.00
Minimum point for initiation of polygonals at X = 100.00
Interval for initiation of polygonals is = 40.00
Minimum point for termination of polygonals at X = 220.00
Interval for termination of polygonals is = 40.00

Coordinate Y = 130.00
Minimum point for initiation of polygonals at X = 100.00
Interval for initiation of polygonals is = 40.00
Minimum point for termination of polygonals at X = 220.00
Interval for termination of polygonals is = 40.00

Coordinate Y = 140.00
Minimum point for initiation of polygonals at X = 100.00
Interval for initiation of polygonals is = 40.00
Minimum point for termination of polygonals at X = 220.00
Interval for termination of polygonals is = 40.00

Coordinate Y = 160.00
Minimum point for initiation of polygonals at X = 120.00
Interval for initiation of polygonals is = 40.00
Minimum point for termination of polygonals at X = 200.00
Interval for termination of polygonals is = 40.00

Coordinate Y = 180.00
Minimum point for initiation of polygonals at X = 120.00
Interval for initiation of polygonals is = 40.00
Minimum point for termination of polygonals at X = 200.00
Interval for termination of polygonals is = 40.00

Coordinate Y = 200.00
Minimum point for initiation of polygonals at X = 120.00
Interval for initiation of polygonals is = 40.00
Minimum point for termination of polygonals at X = 200.00
Interval for termination of polygonals is = 40.00

Coordinate Y = 230.00
Minimum point for initiation of polygonals at X = 120.00
Interval for initiation of polygonals is = 40.00
Minimum point for termination of polygonals at X = 200.00
Interval for termination of polygonals is = 40.00

BOUNDARIES FOR GENERATION IN THE Z DIRECTION :

Zmin(1, 1) = 79.00 Delta Z(1, 1) = 20.00
Zmin(1, 2) = 79.00 Delta Z(1, 2) = 20.00
Zmin(1, 3) = 79.00 Delta Z(1, 3) = 20.00
Zmin(1, 4) = 79.00 Delta Z(1, 4) = 25.00
Zmin(1, 5) = 79.00 Delta Z(1, 5) = 30.00
Zmin(1, 6) = 79.00 Delta Z(1, 6) = 35.00
Zmin(1, 7) = 79.00 Delta Z(1, 7) = 40.00
Zmin(1, 8) = 79.00 Delta Z(1, 8) = 45.00
Zmin(1, 9) = 79.00 Delta Z(1, 9) = 45.00
Zmin(1,10) = 79.00 Delta Z(1,10) = 45.00
Zmin(1,11) = 79.00 Delta Z(1,11) = 45.00
Zmin(1,12) = 79.00 Delta Z(1,12) = 45.00
Zmin(1,13) = 79.00 Delta Z(1,13) = 45.00

Zmin(2, 1) = 79.00 Delta Z(2, 1) = 20.00
Zmin(2, 2) = 79.00 Delta Z(2, 2) = 20.00
Zmin(2, 3) = 79.00 Delta Z(2, 3) = 20.00
Zmin(2, 4) = 79.00 Delta Z(2, 4) = 25.00
Zmin(2, 5) = 79.00 Delta Z(2, 5) = 30.00
Zmin(2, 6) = 79.00 Delta Z(2, 6) = 35.00
Zmin(2, 7) = 79.00 Delta Z(2, 7) = 40.00
Zmin(2, 8) = 79.00 Delta Z(2, 8) = 45.00
Zmin(2, 9) = 79.00 Delta Z(2, 9) = 45.00
Zmin(2,10) = 79.00 Delta Z(2,10) = 45.00
Zmin(2,11) = 79.00 Delta Z(2,11) = 45.00
Zmin(2,12) = 79.00 Delta Z(2,12) = 45.00
Zmin(2,13) = 79.00 Delta Z(2,13) = 45.00
Zmin(3, 1) = 79.00 Delta Z(3, 1) = 20.00
Zmin(3, 2) = 79.00 Delta Z(3, 2) = 20.00
Zmin(3, 3) = 79.00 Delta Z(3, 3) = 20.00
Zmin(3, 4) = 79.00 Delta Z(3, 4) = 25.00
Zmin(3, 5) = 79.00 Delta Z(3, 5) = 30.00
Zmin(3, 6) = 79.00 Delta Z(3, 6) = 35.00
Zmin(3, 7) = 79.00 Delta Z(3, 7) = 40.00
Zmin(3, 8) = 79.00 Delta Z(3, 8) = 45.00
Zmin(3, 9) = 79.00 Delta Z(3, 9) = 45.00
Zmin(3,10) = 79.00 Delta Z(3,10) = 45.00
Zmin(3,11) = 79.00 Delta Z(3,11) = 45.00
Zmin(3,12) = 79.00 Delta Z(3,12) = 45.00
Zmin(3,13) = 79.00 Delta Z(3,13) = 45.00
Zmin(4, 1) = 79.00 Delta Z(4, 1) = 20.00
Zmin(4, 2) = 79.00 Delta Z(4, 2) = 20.00
Zmin(4, 3) = 79.00 Delta Z(4, 3) = 20.00
Zmin(4, 4) = 79.00 Delta Z(4, 4) = 25.00
Zmin(4, 5) = 79.00 Delta Z(4, 5) = 30.00
Zmin(4, 6) = 79.00 Delta Z(4, 6) = 35.00
Zmin(4, 7) = 79.00 Delta Z(4, 7) = 40.00
Zmin(4, 8) = 79.00 Delta Z(4, 8) = 45.00
Zmin(4, 9) = 79.00 Delta Z(4, 9) = 45.00
Zmin(4,10) = 79.00 Delta Z(4,10) = 45.00
Zmin(4,11) = 79.00 Delta Z(4,11) = 45.00
Zmin(4,12) = 79.00 Delta Z(4,12) = 45.00
Zmin(4,13) = 79.00 Delta Z(4,13) = 45.00
Zmin(5, 1) = 79.00 Delta Z(5, 1) = 20.00
Zmin(5, 2) = 79.00 Delta Z(5, 2) = 20.00
Zmin(5, 3) = 79.00 Delta Z(5, 3) = 20.00
Zmin(5, 4) = 79.00 Delta Z(5, 4) = 25.00
Zmin(5, 5) = 79.00 Delta Z(5, 5) = 30.00
Zmin(5, 6) = 79.00 Delta Z(5, 6) = 35.00
Zmin(5, 7) = 79.00 Delta Z(5, 7) = 40.00
Zmin(5, 8) = 79.00 Delta Z(5, 8) = 45.00
Zmin(5, 9) = 79.00 Delta Z(5, 9) = 45.00
Zmin(5,10) = 79.00 Delta Z(5,10) = 45.00
Zmin(5,11) = 79.00 Delta Z(5,11) = 45.00
Zmin(5,12) = 79.00 Delta Z(5,12) = 45.00
Zmin(5,13) = 79.00 Delta Z(5,13) = 45.00
Zmin(6, 1) = 79.00 Delta Z(6, 1) = 20.00
Zmin(6, 2) = 79.00 Delta Z(6, 2) = 20.00
Zmin(6, 3) = 79.00 Delta Z(6, 3) = 20.00
Zmin(6, 4) = 79.00 Delta Z(6, 4) = 25.00
Zmin(6, 5) = 79.00 Delta Z(6, 5) = 30.00
Zmin(6, 6) = 79.00 Delta Z(6, 6) = 35.00

Zmin(6, 7) =	79.00	Delta Z(6, 7) =	40.00
Zmin(6, 8) =	79.00	Delta Z(6, 8) =	45.00
Zmin(6, 9) =	79.00	Delta Z(6, 9) =	45.00
Zmin(6,10) =	79.00	Delta Z(6,10) =	45.00
Zmin(6,11) =	79.00	Delta Z(6,11) =	45.00
Zmin(6,12) =	79.00	Delta Z(6,12) =	45.00
Zmin(6,13) =	79.00	Delta Z(6,13) =	45.00
Zmin(7, 1) =	79.00	Delta Z(7, 1) =	20.00
Zmin(7, 2) =	79.00	Delta Z(7, 2) =	20.00
Zmin(7, 3) =	79.00	Delta Z(7, 3) =	20.00
Zmin(7, 4) =	79.00	Delta Z(7, 4) =	25.00
Zmin(7, 5) =	79.00	Delta Z(7, 5) =	30.00
Zmin(7, 6) =	79.00	Delta Z(7, 6) =	35.00
Zmin(7, 7) =	79.00	Delta Z(7, 7) =	40.00
Zmin(7, 8) =	79.00	Delta Z(7, 8) =	45.00
Zmin(7, 9) =	79.00	Delta Z(7, 9) =	45.00
Zmin(7,10) =	79.00	Delta Z(7,10) =	45.00
Zmin(7,11) =	79.00	Delta Z(7,11) =	45.00
Zmin(7,12) =	79.00	Delta Z(7,12) =	45.00
Zmin(7,13) =	79.00	Delta Z(7,13) =	45.00
Zmin(8, 1) =	79.00	Delta Z(8, 1) =	20.00
Zmin(8, 2) =	79.00	Delta Z(8, 2) =	20.00
Zmin(8, 3) =	79.00	Delta Z(8, 3) =	20.00
Zmin(8, 4) =	79.00	Delta Z(8, 4) =	25.00
Zmin(8, 5) =	79.00	Delta Z(8, 5) =	30.00
Zmin(8, 6) =	79.00	Delta Z(8, 6) =	35.00
Zmin(8, 7) =	79.00	Delta Z(8, 7) =	40.00
Zmin(8, 8) =	79.00	Delta Z(8, 8) =	45.00
Zmin(8, 9) =	79.00	Delta Z(8, 9) =	45.00
Zmin(8,10) =	79.00	Delta Z(8,10) =	45.00
Zmin(8,11) =	79.00	Delta Z(8,11) =	45.00
Zmin(8,12) =	79.00	Delta Z(8,12) =	45.00
Zmin(8,13) =	79.00	Delta Z(8,13) =	45.00
Zmin(9, 1) =	79.00	Delta Z(9, 1) =	20.00
Zmin(9, 2) =	79.00	Delta Z(9, 2) =	20.00
Zmin(9, 3) =	79.00	Delta Z(9, 3) =	20.00
Zmin(9, 4) =	79.00	Delta Z(9, 4) =	25.00
Zmin(9, 5) =	79.00	Delta Z(9, 5) =	30.00
Zmin(9, 6) =	79.00	Delta Z(9, 6) =	35.00
Zmin(9, 7) =	79.00	Delta Z(9, 7) =	40.00
Zmin(9, 8) =	79.00	Delta Z(9, 8) =	45.00
Zmin(9, 9) =	79.00	Delta Z(9, 9) =	45.00
Zmin(9,10) =	79.00	Delta Z(9,10) =	45.00
Zmin(9,11) =	79.00	Delta Z(9,11) =	45.00
Zmin(9,12) =	79.00	Delta Z(9,12) =	45.00
Zmin(9,13) =	79.00	Delta Z(9,13) =	45.00
Zmin(10, 1) =	79.00	Delta Z(10, 1) =	20.00
Zmin(10, 2) =	79.00	Delta Z(10, 2) =	20.00
Zmin(10, 3) =	79.00	Delta Z(10, 3) =	20.00
Zmin(10, 4) =	79.00	Delta Z(10, 4) =	25.00
Zmin(10, 5) =	79.00	Delta Z(10, 5) =	30.00
Zmin(10, 6) =	79.00	Delta Z(10, 6) =	35.00
Zmin(10, 7) =	79.00	Delta Z(10, 7) =	40.00
Zmin(10, 8) =	79.00	Delta Z(10, 8) =	45.00
Zmin(10, 9) =	79.00	Delta Z(10, 9) =	45.00
Zmin(10,10) =	79.00	Delta Z(10,10) =	45.00
Zmin(10,11) =	79.00	Delta Z(10,11) =	45.00
Zmin(10,12) =	79.00	Delta Z(10,12) =	45.00

Zmin(10,13) =	79.00	Delta Z(10,13) =	45.00
Zmin(11, 1) =	79.00	Delta Z(11, 1) =	20.00
Zmin(11, 2) =	79.00	Delta Z(11, 2) =	20.00
Zmin(11, 3) =	79.00	Delta Z(11, 3) =	20.00
Zmin(11, 4) =	79.00	Delta Z(11, 4) =	25.00
Zmin(11, 5) =	79.00	Delta Z(11, 5) =	30.00
Zmin(11, 6) =	79.00	Delta Z(11, 6) =	35.00
Zmin(11, 7) =	79.00	Delta Z(11, 7) =	40.00
Zmin(11, 8) =	79.00	Delta Z(11, 8) =	45.00
Zmin(11, 9) =	79.00	Delta Z(11, 9) =	45.00
Zmin(11,10) =	79.00	Delta Z(11,10) =	45.00
Zmin(11,11) =	79.00	Delta Z(11,11) =	45.00
Zmin(11,12) =	79.00	Delta Z(11,12) =	45.00
Zmin(11,13) =	79.00	Delta Z(11,13) =	45.00
Zmin(12, 1) =	79.00	Delta Z(12, 1) =	20.00
Zmin(12, 2) =	79.00	Delta Z(12, 2) =	20.00
Zmin(12, 3) =	79.00	Delta Z(12, 3) =	20.00
Zmin(12, 4) =	79.00	Delta Z(12, 4) =	25.00
Zmin(12, 5) =	79.00	Delta Z(12, 5) =	30.00
Zmin(12, 6) =	79.00	Delta Z(12, 6) =	35.00
Zmin(12, 7) =	79.00	Delta Z(12, 7) =	40.00
Zmin(12, 8) =	79.00	Delta Z(12, 8) =	45.00
Zmin(12, 9) =	79.00	Delta Z(12, 9) =	45.00
Zmin(12,10) =	79.00	Delta Z(12,10) =	45.00
Zmin(12,11) =	79.00	Delta Z(12,11) =	45.00
Zmin(12,12) =	79.00	Delta Z(12,12) =	45.00
Zmin(12,13) =	79.00	Delta Z(12,13) =	45.00
Zmin(13, 1) =	79.00	Delta Z(13, 1) =	20.00
Zmin(13, 2) =	79.00	Delta Z(13, 2) =	20.00
Zmin(13, 3) =	79.00	Delta Z(13, 3) =	20.00
Zmin(13, 4) =	79.00	Delta Z(13, 4) =	25.00
Zmin(13, 5) =	79.00	Delta Z(13, 5) =	30.00
Zmin(13, 6) =	79.00	Delta Z(13, 6) =	35.00
Zmin(13, 7) =	79.00	Delta Z(13, 7) =	40.00
Zmin(13, 8) =	79.00	Delta Z(13, 8) =	45.00
Zmin(13, 9) =	79.00	Delta Z(13, 9) =	45.00
Zmin(13,10) =	79.00	Delta Z(13,10) =	45.00
Zmin(13,11) =	79.00	Delta Z(13,11) =	45.00
Zmin(13,12) =	79.00	Delta Z(13,12) =	45.00
Zmin(13,13) =	79.00	Delta Z(13,13) =	45.00
Zmin(14, 1) =	79.00	Delta Z(14, 1) =	20.00
Zmin(14, 2) =	79.00	Delta Z(14, 2) =	20.00
Zmin(14, 3) =	79.00	Delta Z(14, 3) =	20.00
Zmin(14, 4) =	79.00	Delta Z(14, 4) =	25.00
Zmin(14, 5) =	79.00	Delta Z(14, 5) =	30.00
Zmin(14, 6) =	79.00	Delta Z(14, 6) =	35.00
Zmin(14, 7) =	79.00	Delta Z(14, 7) =	40.00
Zmin(14, 8) =	79.00	Delta Z(14, 8) =	45.00
Zmin(14, 9) =	79.00	Delta Z(14, 9) =	45.00
Zmin(14,10) =	79.00	Delta Z(14,10) =	45.00
Zmin(14,11) =	79.00	Delta Z(14,11) =	45.00
Zmin(14,12) =	79.00	Delta Z(14,12) =	45.00
Zmin(14,13) =	79.00	Delta Z(14,13) =	45.00
Zmin(15, 1) =	79.00	Delta Z(15, 1) =	20.00
Zmin(15, 2) =	79.00	Delta Z(15, 2) =	20.00
Zmin(15, 3) =	79.00	Delta Z(15, 3) =	20.00
Zmin(15, 4) =	79.00	Delta Z(15, 4) =	25.00
Zmin(15, 5) =	79.00	Delta Z(15, 5) =	30.00

Zmin(15, 6) = 79.00 Delta Z(15, 6) = 35.00
Zmin(15, 7) = 79.00 Delta Z(15, 7) = 40.00
Zmin(15, 8) = 79.00 Delta Z(15, 8) = 45.00
Zmin(15, 9) = 79.00 Delta Z(15, 9) = 45.00
Zmin(15,10) = 79.00 Delta Z(15,10) = 45.00
Zmin(15,11) = 79.00 Delta Z(15,11) = 45.00
Zmin(15,12) = 79.00 Delta Z(15,12) = 45.00
Zmin(15,13) = 79.00 Delta Z(15,13) = 45.00

SOIL PROPERTIES :

Soil	Unit Weight	Cohesion	Shear Angle
1	110.00	100.0	28.0

Ru of soil # 1 = .00

TEN MOST CRITICAL SURFACES :

SURFACE # 1

Coordinate X	Coordinate Y	Coordinate Z
180.000	40.370	.000
138.225	60.000	345.562
160.000	60.000	95.803
180.000	60.000	95.549
200.000	60.000	95.803
221.775	60.000	554.438
125.056	80.000	312.640
130.000	80.000	84.907
160.000	80.000	82.613
180.000	80.000	82.346
200.000	80.000	82.613
230.000	80.000	84.907
234.944	80.000	587.360
114.484	100.000	305.299
120.000	100.000	104.000
130.000	100.000	104.000
160.000	100.000	92.738
180.000	100.000	84.590
200.000	100.000	92.738
230.000	100.000	104.000
240.000	100.000	104.000
245.516	100.000	654.731
116.914	120.000	331.246
120.000	120.000	109.000
130.000	120.000	108.457
160.000	120.000	104.945
180.000	120.000	103.570
200.000	120.000	104.945
230.000	120.000	108.457
240.000	120.000	109.000
243.086	120.000	688.724

118.573	130.000	355.719
120.000	130.000	114.000
130.000	130.000	114.000
160.000	130.000	114.000
180.000	130.000	114.000
200.000	130.000	114.000
230.000	130.000	114.000
240.000	130.000	114.000
241.427	130.000	724.281
180.000	137.337	.000

Factor of Safety = 1.822

SURFACE # 2

Coordinate X	Coordinate Y	Coordinate Z
180.000	43.397	.000
150.678	60.000	376.696
160.000	60.000	88.254
180.000	60.000	86.833
200.000	60.000	88.254
209.322	60.000	523.304
122.693	80.000	306.733
130.000	80.000	97.993
160.000	80.000	83.627
180.000	80.000	82.713
200.000	80.000	83.627
230.000	80.000	97.993
237.307	80.000	593.267
114.992	100.000	306.656
120.000	100.000	99.357
130.000	100.000	89.323
160.000	100.000	88.130
180.000	100.000	87.966
200.000	100.000	88.130
230.000	100.000	89.323
240.000	100.000	99.357
245.008	100.000	653.374
116.531	120.000	330.162
120.000	120.000	109.000
130.000	120.000	109.000
160.000	120.000	107.418
180.000	120.000	102.401
200.000	120.000	107.418
230.000	120.000	109.000
240.000	120.000	109.000
243.469	120.000	689.808
118.355	130.000	355.065
120.000	130.000	114.000
130.000	130.000	114.000
160.000	130.000	112.261
180.000	130.000	112.238
200.000	130.000	112.261
230.000	130.000	114.000
240.000	130.000	114.000
241.645	130.000	724.935

128.958	140.000	408.377
130.000	140.000	119.000
160.000	140.000	119.000
180.000	140.000	119.000
200.000	140.000	119.000
230.000	140.000	119.000
231.042	140.000	731.653
180.000	156.018	.000

Factor of Safety = 1.946

SURFACE # 3

Coordinate X	Coordinate Y	Coordinate Z
180.000	43.397	.000
150.678	60.000	376.696
160.000	60.000	88.254
180.000	60.000	86.833
200.000	60.000	88.254
209.322	60.000	523.304
122.693	80.000	306.733
130.000	80.000	97.993
160.000	80.000	83.627
180.000	80.000	82.713
200.000	80.000	83.627
230.000	80.000	97.993
237.307	80.000	593.267
114.992	100.000	306.656
120.000	100.000	99.357
130.000	100.000	89.323
160.000	100.000	88.130
180.000	100.000	87.966
200.000	100.000	88.130
230.000	100.000	89.323
240.000	100.000	99.357
245.008	100.000	653.374
116.531	120.000	330.162
120.000	120.000	109.000
130.000	120.000	109.000
160.000	120.000	107.418
180.000	120.000	102.401
200.000	120.000	107.418
230.000	120.000	109.000
240.000	120.000	109.000
243.469	120.000	689.808
118.355	130.000	355.065
120.000	130.000	114.000
130.000	130.000	114.000
160.000	130.000	112.261
180.000	130.000	112.238
200.000	130.000	112.261
230.000	130.000	114.000
240.000	130.000	114.000
241.645	130.000	724.935
128.958	140.000	408.377
130.000	140.000	119.000

160.000	140.000	119.000
180.000	140.000	119.000
200.000	140.000	119.000
230.000	140.000	119.000
231.042	140.000	731.653
180.000	156.018	.000

Factor of Safety = 1.946

SURFACE # 4

Coordinate X	Coordinate Y	Coordinate Z
180.000	43.397	.000
150.678	60.000	376.696
160.000	60.000	88.254
180.000	60.000	86.833
200.000	60.000	88.254
209.322	60.000	523.304
122.693	80.000	306.733
130.000	80.000	97.993
160.000	80.000	83.627
180.000	80.000	82.713
200.000	80.000	83.627
230.000	80.000	97.993
237.307	80.000	593.267
114.992	100.000	306.656
120.000	100.000	99.357
130.000	100.000	89.323
160.000	100.000	88.130
180.000	100.000	87.966
200.000	100.000	88.130
230.000	100.000	89.323
240.000	100.000	99.357
245.008	100.000	653.374
116.531	120.000	330.162
120.000	120.000	109.000
130.000	120.000	109.000
160.000	120.000	107.418
180.000	120.000	102.401
200.000	120.000	107.418
230.000	120.000	109.000
240.000	120.000	109.000
243.469	120.000	689.808
118.355	130.000	355.065
120.000	130.000	114.000
130.000	130.000	114.000
160.000	130.000	112.261
180.000	130.000	112.238
200.000	130.000	112.261
230.000	130.000	114.000
240.000	130.000	114.000
241.645	130.000	724.935
128.958	140.000	408.377
130.000	140.000	119.000
160.000	140.000	119.000
180.000	140.000	119.000

200.000	140.000	119.000
230.000	140.000	119.000
231.042	140.000	731.653
180.000	156.018	.000

Factor of Safety = 1.946

SURFACE # 5

Coordinate X	Coordinate Y	Coordinate Z
180.000	43.397	.000
150.678	60.000	376.696
160.000	60.000	88.254
180.000	60.000	86.833
200.000	60.000	88.254
209.322	60.000	523.304
122.693	80.000	306.733
130.000	80.000	97.993
160.000	80.000	83.627
180.000	80.000	82.713
200.000	80.000	83.627
230.000	80.000	97.993
237.307	80.000	593.267
114.992	100.000	306.656
120.000	100.000	99.357
130.000	100.000	89.323
160.000	100.000	88.130
180.000	100.000	87.966
200.000	100.000	88.130
230.000	100.000	89.323
240.000	100.000	99.357
245.008	100.000	653.374
116.531	120.000	330.162
120.000	120.000	109.000
130.000	120.000	109.000
160.000	120.000	107.418
180.000	120.000	102.401
200.000	120.000	107.418
230.000	120.000	109.000
240.000	120.000	109.000
243.469	120.000	689.808
118.355	130.000	355.065
120.000	130.000	114.000
130.000	130.000	114.000
160.000	130.000	112.261
180.000	130.000	112.238
200.000	130.000	112.261
230.000	130.000	114.000
240.000	130.000	114.000
241.645	130.000	724.935
128.958	140.000	408.377
130.000	140.000	119.000
160.000	140.000	119.000
180.000	140.000	119.000
200.000	140.000	119.000
230.000	140.000	119.000

231.042	140.000	731.653
180.000	156.018	.000

Factor of Safety = 1.946

SURFACE # 6

Coordinate X	Coordinate Y	Coordinate Z
180.000	43.397	.000
150.678	60.000	376.696
160.000	60.000	88.254
180.000	60.000	86.833
200.000	60.000	88.254
209.322	60.000	523.304
122.693	80.000	306.733
130.000	80.000	97.993
160.000	80.000	83.627
180.000	80.000	82.713
200.000	80.000	83.627
230.000	80.000	97.993
237.307	80.000	593.267
114.992	100.000	306.656
120.000	100.000	99.357
130.000	100.000	89.323
160.000	100.000	88.130
180.000	100.000	87.966
200.000	100.000	88.130
230.000	100.000	89.323
240.000	100.000	99.357
245.008	100.000	653.374
116.531	120.000	330.162
120.000	120.000	109.000
130.000	120.000	109.000
160.000	120.000	107.418
180.000	120.000	102.401
200.000	120.000	107.418
230.000	120.000	109.000
240.000	120.000	109.000
243.469	120.000	689.808
118.355	130.000	355.065
120.000	130.000	114.000
130.000	130.000	114.000
160.000	130.000	112.261
180.000	130.000	112.238
200.000	130.000	112.261
230.000	130.000	114.000
240.000	130.000	114.000
241.645	130.000	724.935
128.958	140.000	408.377
130.000	140.000	119.000
160.000	140.000	119.000
180.000	140.000	119.000
200.000	140.000	119.000
230.000	140.000	119.000
231.042	140.000	731.653
180.000	156.018	.000

Factor of Safety = 1.946

SURFACE # 7

Coordinate X	Coordinate Y	Coordinate Z
180.000	43.397	.000
150.678	60.000	376.696
160.000	60.000	88.254
180.000	60.000	86.833
200.000	60.000	88.254
209.322	60.000	523.304
122.693	80.000	306.733
130.000	80.000	97.993
160.000	80.000	83.627
180.000	80.000	82.713
200.000	80.000	83.627
230.000	80.000	97.993
237.307	80.000	593.267
114.992	100.000	306.656
120.000	100.000	99.357
130.000	100.000	89.323
160.000	100.000	88.130
180.000	100.000	87.966
200.000	100.000	88.130
230.000	100.000	89.323
240.000	100.000	99.357
245.008	100.000	653.374
116.531	120.000	330.162
120.000	120.000	109.000
130.000	120.000	109.000
160.000	120.000	107.418
180.000	120.000	102.401
200.000	120.000	107.418
230.000	120.000	109.000
240.000	120.000	109.000
243.469	120.000	689.808
118.355	130.000	355.065
120.000	130.000	114.000
130.000	130.000	114.000
160.000	130.000	112.261
180.000	130.000	112.238
200.000	130.000	112.261
230.000	130.000	114.000
240.000	130.000	114.000
241.645	130.000	724.935
128.958	140.000	408.377
130.000	140.000	119.000
160.000	140.000	119.000
180.000	140.000	119.000
200.000	140.000	119.000
230.000	140.000	119.000
231.042	140.000	731.653
180.000	156.018	.000

Factor of Safety = 1.946

SURFACE # 8

Coordinate X	Coordinate Y	Coordinate Z
180.000	43.397	.000
150.678	60.000	376.696
160.000	60.000	88.254
180.000	60.000	86.833
200.000	60.000	88.254
209.322	60.000	523.304
122.693	80.000	306.733
130.000	80.000	97.993
160.000	80.000	83.627
180.000	80.000	82.713
200.000	80.000	83.627
230.000	80.000	97.993
237.307	80.000	593.267
114.992	100.000	306.656
120.000	100.000	99.357
130.000	100.000	89.323
160.000	100.000	88.130
180.000	100.000	87.966
200.000	100.000	88.130
230.000	100.000	89.323
240.000	100.000	99.357
245.008	100.000	653.374
116.531	120.000	330.162
120.000	120.000	109.000
130.000	120.000	109.000
160.000	120.000	107.418
180.000	120.000	102.401
200.000	120.000	107.418
230.000	120.000	109.000
240.000	120.000	109.000
243.469	120.000	689.808
118.355	130.000	355.065
120.000	130.000	114.000
130.000	130.000	114.000
160.000	130.000	112.261
180.000	130.000	112.238
200.000	130.000	112.261
230.000	130.000	114.000
240.000	130.000	114.000
241.645	130.000	724.935
128.958	140.000	408.377
130.000	140.000	119.000
160.000	140.000	119.000
180.000	140.000	119.000
200.000	140.000	119.000
230.000	140.000	119.000
231.042	140.000	731.653
180.000	156.018	.000

Factor of Safety = 1.946

SURFACE # 9

Coordinate X	Coordinate Y	Coordinate Z
180.000	43.397	.000
150.678	60.000	376.696
160.000	60.000	88.254
180.000	60.000	86.833
200.000	60.000	88.254
209.322	60.000	523.304
122.693	80.000	306.733
130.000	80.000	97.993
160.000	80.000	83.627
180.000	80.000	82.713
200.000	80.000	83.627
230.000	80.000	97.993
237.307	80.000	593.267
114.992	100.000	306.656
120.000	100.000	99.357
130.000	100.000	89.323
160.000	100.000	88.130
180.000	100.000	87.966
200.000	100.000	88.130
230.000	100.000	89.323
240.000	100.000	99.357
245.008	100.000	653.374
116.531	120.000	330.162
120.000	120.000	109.000
130.000	120.000	109.000
160.000	120.000	107.418
180.000	120.000	102.401
200.000	120.000	107.418
230.000	120.000	109.000
240.000	120.000	109.000
243.469	120.000	689.808
118.355	130.000	355.065
120.000	130.000	114.000
130.000	130.000	114.000
160.000	130.000	112.261
180.000	130.000	112.238
200.000	130.000	112.261
230.000	130.000	114.000
240.000	130.000	114.000
241.645	130.000	724.935
128.958	140.000	408.377
130.000	140.000	119.000
160.000	140.000	119.000
180.000	140.000	119.000
200.000	140.000	119.000
230.000	140.000	119.000
231.042	140.000	731.653
180.000	156.018	.000

Factor of Safety = 1.946

SURFACE # 10

Coordinate X	Coordinate Y	Coordinate Z

180.000	43.397	.000
150.678	60.000	376.696
160.000	60.000	88.254
180.000	60.000	86.833
200.000	60.000	88.254
209.322	60.000	523.304
122.693	80.000	306.733
130.000	80.000	97.993
160.000	80.000	83.627
180.000	80.000	82.713
200.000	80.000	83.627
230.000	80.000	97.993
237.307	80.000	593.267
114.992	100.000	306.656
120.000	100.000	99.357
130.000	100.000	89.323
160.000	100.000	88.130
180.000	100.000	87.966
200.000	100.000	88.130
230.000	100.000	89.323
240.000	100.000	99.357
245.008	100.000	653.374
116.531	120.000	330.162
120.000	120.000	109.000
130.000	120.000	109.000
160.000	120.000	107.418
180.000	120.000	102.401
200.000	120.000	107.418
230.000	120.000	109.000
240.000	120.000	109.000
243.469	120.000	689.808
118.355	130.000	355.065
120.000	130.000	114.000
130.000	130.000	114.000
160.000	130.000	112.261
180.000	130.000	112.238
200.000	130.000	112.261
230.000	130.000	114.000
240.000	130.000	114.000
241.645	130.000	724.935
128.958	140.000	408.377
130.000	140.000	119.000
160.000	140.000	119.000
180.000	140.000	119.000
200.000	140.000	119.000
230.000	140.000	119.000
231.042	140.000	731.653
180.000	156.018	.000

Factor of Safety = 1.946

APPENDIX C PROGRAM SOURCE CODE

PCSTABL3D

```
^H                                                                    PAGE   1
                                                                   04-12-91
                                                                   12:06:11

Line#  Source Line          Microsoft FORTRAN Optimizing Compiler Version 5.00

     1  $notruncate
     2  $title:'PCSTBL3D v2.0'
     3  $large
     4        PROGRAM THESIS
     5  *
     6  *======================== Prologue ====================================
     7  *
     8  * Purpose:
     9  *    Main module of the program PCSTBL3D
    10  *
    11  * History:
    12  *    Version         Programmer     Date          Description
    13  *    -------         ----------     ----          -----------
    14  *    1.0             J.E.Thomas                   created
    15  *    2.0             G.Moshkovich                 code beautified,
    16  *                                                 variables declared
    17  *
    18  * IN args/commons           Units           Description
    19  * ---------------           -----           -----------
    20  *
    21  * OUT args/commons          Units           Description
    22  * ----------------          -----           -----------
    23  *
    24  * INOUT args/commons        Units           Description
    25  * ------------------        -----           -----------
    26  *
    27  * Processing:
    28  *    Main processing module. Gets in/output datafile names, number
    29  * of critical surfaces to be generated, and invoke calculation routins.
    30  *
    31  * Special Requirements:
    32  *    none
    33  *
    34  *------------------------ Include files -----------------------------
    35  $include:'CURRENTF.INC'
  ***** Begin listing of: CURRENTF.INC
     1  *
     2  *======================== Prologue ====================================
     3  *
     4  * Purpose:
     5  *    Include file with parameter declaration for the program PCSTL3D
     6  *
     7  * History:
     8  *    Version         Programmer     Date          Description
     9  *    -------         ----------     ----          -----------
    10  *    1.0             G.Moshkovich                 created
    11  *
    12  * IN args/commons           Units           Description
    13  * ---------------           -----           -----------
    14  *
    15  * OUT args/commons          Units           Description
    16  * ----------------          -----           -----------
    17  *
    18  * INOUT args/commons        Units           Description
    19  * ------------------        -----           -----------
    20  *
    21  * Processing:
    22  *    none
```

Line# Source Line Microsoft FORTRAN Optimizing Compiler Version 5.00

```
 23  *
 24  * Special Requirements:
 25  *    none
 26  *
 27  *------------------------ Include files -------------------------------
 28  *------------------------ Constant declarations ----------------------
 29        integer MCOORD, MSOIL, NUMCOL, NCORN
 30
 31        parameter (MCOORD = 25, MSOIL = 5)
 32        parameter (NUMCOL = 10, NCORN = 4)
 33        PARAMETER (MAXSUR=2000)
 34
 35  *------- MCOORD - maximum number of points in each direction
 36  *------- MSOIL -  maximum number of soil layers
 37  *------- NUMCOL - maximum number of generated columns
 38  *------- NCORN - number of nods for each column (do not change)
 39
 40  *------------------------ Argument declarations ----------------------
 41  *------------------------ Global/External declarations ---------------
 42  *------------------------ Local declarations -------------------------
 43
 44
 45
   ***** End listing of: CURRENTF.INC
 36  *------------------------ Constant declarations ----------------------
 37  *------------------------ Argument declarations ----------------------
 38  *------------------------ Global/External declarations ---------------
 39        EXTERNAL INDATA,GENSUR,PARAM1,CRITIC
 40  *------------------------ Local declarations -------------------------
 41        REAL X(MCOORD),Y(MCOORD),Z(MSOIL,MCOORD,MCOORD),XMIN1(MCOORD),
 42       1DXMIN1(MCOORD),XMIN2(MCOORD),DXMIN2(MCOORD),ZMIN(MCOORD,MCOORD),
 43       2DZMIN(MCOORD,MCOORD),GAMA(MSOIL),COES(MSOIL),FI(MSOIL),RU(MSOIL),
 44       3UZ(MSOIL,MCOORD,MCOORD),XIPOL(MCOORD),XFPOL(MCOORD),XPOL(MCOORD,
 45       4MCOORD),YPOL(MCOORD),ZPOL(MCOORD,MCOORD),XDIFF(MCOORD),
 46       5XCOL(MCOORD,-NUMCOL:NUMCOL,NCORN),YCOL(MCOORD,-NUMCOL:NUMCOL,
 47       6NCORN),ZCOL(MCOORD,-NUMCOL:NUMCOL,NCORN),NCOLEF(MCOORD),
 48       7NPTLEF(MCOORD),NCORIG(MCOORD),NPTRIG(MCOORD),ALPHAXZ(MCOORD,-
 49       8NUMCOL:NUMCOL),ALPHAYZ(MCOORD,-NUMCOL:NUMCOL),DIP(MCOORD,-
 50       9NUMCOL:NUMCOL),TETA(MCOORD,-NUMCOL:NUMCOL),A3(MCOORD,-
 51       XNUMCOL:NUMCOL),ZSOL(MSOIL,MCOORD,-NUMCOL:NUMCOL,NCORN),W3(MCOORD,
 52       XNUMCOL:NUMCOL),U3(MCOORD,-NUMCOL:NUMCOL)
 53        REAL FSCUM(MAXSUR)
 54        REAL XAPRIN,YMIN1,DYMIN1,YMIN2,DYMIN2,DATOUT,FS,YPA1,YPA2
 55        INTEGER NXPOL(MCOORD),NXSTAR(MCOORD),NXEND(MCOORD),UCOND(MSOIL)
 56        INTEGER DIFF,NX,NY,NSOIL,NSURFA,NSURF,NYSTAR,NYPOL,NYEND
 57  *------------------------ Code ---------------------------------------
 58        PRINT 20, 1,' '
 59        PRINT *,' ************************************************'
 60        PRINT *,' *    3D-PCSTABL : Three Dimesional Slope Stability *'
 61        PRINT *,' *                 from Purdue University          *'
 62        PRINT *,' ************************************************'
 63        PRINT *,' '
 64        PRINT *,' '
 65  *.....read data ..........................................................
 66        CALL INDATA (NX,NY,NSOIL,X,Y,Z,XAPRIN,YMIN1,DYMIN1,YMIN2,DYMIN2,
 67       1XMIN1,DXMIN1,XMIN2,DXMIN2,ZMIN,DZMIN,GAMA,COES,FI,UCOND,RU,UZ,
 68       2DATOUT)
 69        WRITE (*,30) ' Enter number of surfaces to be generated : '
```

^H PCSTBL3D v2.0 PAGE 3
04-12-91
12:06:11

Line# Source Line Microsoft FORTRAN Optimizing Compiler Version 5.00

```
    70         READ (*,*) NSURFA
    71         WRITE (*,*) '  '
    72         WRITE (*,*) ' Running ....'
    73         DO 10 NSURF=1,NSURFA
    74             WRITE (*,*) 'Now analysing surface #',NSURF
    75   *.....generate 3D-surface.....................................
    76             CALL GENSUR (NX,NY,X,Y,Z,XAPRIN,YMIN1,DYMIN1,YMIN2,DYMIN2,
    77        1     XMIN1,DXMIN1,XMIN2,DXMIN2,ZMIN,DZMIN,YPA1,NXEND,YPA2,NYSTAR,
    78        2     NYPOL,XIPOL,XFPOL,NXSTAR,NXPOL,XPOL,ZPOL,YPOL,XCOL,YCOL,ZCOL
    79        3     NCOLEF,NCORIG,NPTLEF,NPTRIG,ZSOL,NSOIL,NYEND,DIFF)
    80   *.....calculate parameters of columms.........................
    81             CALL PARAM1 (NYPOL,XCOL,YCOL,ZCOL,ZSOL,NCOLEF,NCORIG,ALPHAXZ,
    82        1     ALPHAYZ,DIP,TETA,A3,GAMA,RU,W3,U3,NSOIL)
    83   *.....calculate factor of safety..............................
    84             CALL FSCALC (COES,FI,A3,W3,U3,DIP,ALPHAYZ,FS,NYPOL,NCOLEF,
    85        1     NCORIG)
    86             IF (FS.GT.0.1) THEN
    87                 FSCUM(NFS)=FS
    88                 NFS=NFS+1
    89             END IF
    90   *.....store and print 10 most critical surfaces.....................
    91             CALL CRITIC (NYPOL,NXPOL,XPOL,YPOL,ZPOL,NXSTAR,NXEND,NSURF,
    92        1     NSURFA,FS,NX,NY,X,Y,Z,NYSTAR,NYEND)
    93   *.....end of loop.............................................
    94    10   CONTINUE
    95         CALL WEIBUL (NFS,FSCUM)
    96         WRITE (*,*) ' Finished.. Use graphical processor to check surface
    97         STOP
    98   C
    99    20   FORMAT (A,T2,A)
   100    30   FORMAT (A)
   101         END
***** THESIS.FOR(101) : warning F4999: XDIFF : variable declared but not used
```

main Local Symbols

Name	Class	Type	Size	Offset
Z	local	REAL*4	12500	0000
NCORIG	local	REAL*4	100	0000
NSOIL	local	INTEGER*4	4	0002
NSURF	local	INTEGER*4	4	0006
NSURFA	local	INTEGER*4	4	000a
DATOUT	local	REAL*4	4	000e
NYPOL	local	INTEGER*4	4	0012
XAPRIN	local	REAL*4	4	0016
DIFF	local	INTEGER*4	4	001a
FS	local	REAL*4	4	001e
YPA1	local	REAL*4	4	0022
YPA2	local	REAL*4	4	0026
NYSTAR	local	INTEGER*4	4	002a
NX	local	INTEGER*4	4	002e
NFS	local	INTEGER*4	4	0032
NY	local	INTEGER*4	4	0036
YMIN1	local	REAL*4	4	003a
YMIN2	local	REAL*4	4	003e

Microsoft FORTRAN Optimizing Compiler Version 5.00

main Local Symbols

Name	Class	Type	Size	Offset
DYMIN1.	local	REAL*4	4	0042
DYMIN2.	local	REAL*4	4	0046
NYEND	local	INTEGER*4	4	004a
DZMIN	local	REAL*4	2500	0064
XPOL.	local	REAL*4	2500	0a28
YPOL.	local	REAL*4	100	13ec
ZPOL.	local	REAL*4	2500	1450
U3.	local	REAL*4	2100	1e14
ZSOL.	local	REAL*4	42000	2648
DIP	local	REAL*4	2100	30d4
NXSTAR.	local	INTEGER*4	100	3908
RU.	local	REAL*4	20	396c
COES.	local	REAL*4	20	3980
XMIN1	local	REAL*4	100	3994
TETA.	local	REAL*4	2100	39f8
XMIN2	local	REAL*4	100	422c
UZ.	local	REAL*4	12500	4290
XDIFF	local	REAL*4	100	7364
DXMIN1.	local	REAL*4	100	73c8
DXMIN2.	local	REAL*4	100	742c
A3.	local	REAL*4	2100	7490
XCOL.	local	REAL*4	8400	7cc4
NCOLEF.	local	REAL*4	100	9d94
YCOL.	local	REAL*4	8400	9df8
ZCOL.	local	REAL*4	8400	bec8
NPTLEF.	local	REAL*4	100	ca58
XFPOL	local	REAL*4	100	cabc
W3.	local	REAL*4	2100	cb20
XIPOL	local	REAL*4	100	d354
FI.	local	REAL*4	20	d3b8
NXPOL	local	INTEGER*4	100	d3cc
NPTRIG.	local	REAL*4	100	d430
GAMA.	local	REAL*4	20	d494
ALPHAXZ	local	REAL*4	2100	d4a8
X	local	REAL*4	100	dcdc
ALPHAYZ	local	REAL*4	2100	dd40
UCOND	local	INTEGER*4	20	df98
NXEND	local	INTEGER*4	100	dfac
FSCUM	local	REAL*4	8000	e010
Y	local	REAL*4	100	e574
ZMIN.	local	REAL*4	2500	e5d8

Symbolic Constant	Type	Value
MCOORD.	INTEGER*4	25
MSOIL	INTEGER*4	5
NUMCOL.	INTEGER*4	10
NCORN	INTEGER*4	4
MAXSUR.	INTEGER*4	2000

```
^H  PCSTBL3D v2.0                                                    PAGE   5
                                                                   04-12-91
                                                                   12:06:11

                          Microsoft FORTRAN Optimizing Compiler Version 5.00

Global Symbols

Name                        Class   Type              Size   Offset

CRITIC. . . . . . . . . . . extern  ***               ***     ***
FSCALC. . . . . . . . . . . extern  ***               ***     ***
GENSUR. . . . . . . . . . . extern  ***               ***     ***
INDATA. . . . . . . . . . . extern  ***               ***     ***
PARAM1. . . . . . . . . . . extern  ***               ***     ***
WEIBUL. . . . . . . . . . . extern  ***               ***     ***
main. . . . . . . . . . . . FSUBRT  ***               ***    0000

Code size = 04a5 (1189)
Data size = 01c1 (449)
Bss size  = 004e (78)

No errors detected
^H                                                                   PAGE   1
                                                                   04-12-91
                                                                   12:06:28

 Line#  Source Line          Microsoft FORTRAN Optimizing Compiler Version 5.00

     1  $notruncate
     2  $title:'PCSTBL3D v2.0'
     3  $subtitle:'Left Side Columns'
     4        SUBROUTINE COLUML (YPA1,YPA2,NYSTAR,NYPOL,X,Y,Z,XAPRIN,XIPOL,
     5       1NXSTAR,NXPOL,XPOL,YPOL,XCOL,YCOL,ZCOL,NCOLEF,NPTLEF,ZPOL,ZSOL,
     6       2XDIFF,NSOIL,NPPOL)
     7  *
     8  *======================== Prologue ====================================
     9  *
    10  * Purpose:
    11  *    Calculates coordinates of the columns for the left side
    12  *
    13  * History:
    14  *    Version          Programmer     Date          Description
    15  *    -------          ----------     ----          -----------
    16  *    1.0              J.E.Thomas                   created
    17  *    2.0              G.Moshkovich                 code beautified,
    18  *                                                  variables declared
    19  *
    20  * IN args/commons           Units            Description
    21  * ---------------           -----            -----------
    22  * x
    23  * y
    24  * z
    25  *
    26  * OUT args/commons          Units            Description
    27  * ----------------          -----            -----------
    28  *
    29  * INOUT args/commons        Units            Description
    30  * ------------------        -----            -----------
    31  *
    32  * Processing:
    33  *    Main processing module. Gets in/output datafile names, number
    34  * of critical surfaces to be generated, and invoke calculation routins.
    35  *
    36  * Special Requirements:
    37  *    none
    38  *
    39  *------------------------ Include files ------------------------------
    40  $include:'CURRENTF.INC'
```

```
***** Begin listing of: CURRENTF.INC
1   *
2   *======================== Prologue ===================================
3   *
4   * Purpose:
5   *    Include file with parameter declaration for the program PCSTL3D
6   *
7   * History:
8   *    Version         Programmer     Date          Description
9   *    -------         ----------     ----          -----------
10  *    1.0             G.Moshkovich                 created
11  *
12  * IN args/commons           Units            Description
13  * ---------------           -----            -----------
14  *
15  * OUT args/commons          Units            Description
16  * ----------------          -----            -----------
17  *
```

Line# Source Line Microsoft FORTRAN Optimizing Compiler Version 5.00

```
    18  * INOUT args/commons        Units            Description
    19  * ------------------        -----            -----------
    20  *
    21  * Processing:
    22  *    none
    23  *
    24  * Special Requirements:
    25  *    none
    26  *
    27  *------------------------- Include files -----------------------------
    28  *------------------------- Constant declarations ---------------------
    29        integer MCOORD, MSOIL, NUMCOL, NCORN
    30
    31        parameter (MCOORD = 25, MSOIL = 5)
    32        parameter (NUMCOL = 10, NCORN = 4)
    33        PARAMETER (MAXSUR=2000)
    34
    35  *------- MCOORD - maximum number of points in each direction
    36  *------- MSOIL -  maximum number of soil layers
    37  *------- NUMCOL - maximum number of generated columns
    38  *------- NCORN - number of nods for each column (do not change)
    39
    40  *------------------------- Argument declarations ---------------------
    41  *------------------------- Global/External declarations --------------
    42  *------------------------- Local declarations ------------------------
    43
    44
    45
     ***** End listing of: CURRENTF.INC
    41  *------------------------- Constant declarations ---------------------
    42  *------------------------- Argument declarations ---------------------
    43        REAL X(MCOORD),Y(MCOORD),Z(MSOIL,MCOORD,MCOORD),XIPOL(MCOORD),
    44       1XPOL(MCOORD,MCOORD),ZPOL(MCOORD,MCOORD),YPOL(MCOORD),XCOL(MCOORD,
    45       2NUMCOL:NUMCOL,NCORN),YCOL(MCOORD,-NUMCOL:NUMCOL,NCORN),
    46       3ZCOL(MCOORD,-NUMCOL:NUMCOL,NCORN),ZSOL(MSOIL,MCOORD,-
    47       4NUMCOL:NUMCOL,NCORN)
    48        REAL YPA1,YPA2
    49        INTEGER XAPRIN,XROW
    50        INTEGER XDIFF(MCOORD),NXPOL(MCOORD),NXSTAR(MCOORD),NCOLEF(MCOORD)
    51       1NPTLEF(MCOORD)
    52  *------------------------- Global/External declarations --------------
    53        EXTERNAL COORYZ
    54  *------------------------- Local declarations ------------------------
    55        REAL YTES1,XTES1,YTES2,XTES2,A,B,YTESTE,ZFINAL,ALPHA
    56        INTEGER I,NI,NY,M1,NNN,J,II,NNJ,NNJ1,JJJ,JJJ1
    57  *------------------------- Code --------------------------------------
    58  C     ------------------------------------------------------------
    59  C     calculate cordinates of basis of columns
    60  C     ------------------------------------------------------------
    61  C     ------------------------------------------------------------
    62  C     PART 1 - 1st SERIES OF COLUMNS - LEFT SIDE
    63  C     ------------------------------------------------------------
    64        YTES1=YPA1
    65        XTES1=X(XAPRIN)
    66        YTES2=Y(NYSTAR)
    67        XTES2=XIPOL(2)
    68        A=(YTES1-YTES2)/(XTES1-XTES2)
    69        B=YTES1-A*XTES1
```

Line# Source Line Microsoft FORTRAN Optimizing Compiler Version 5.00

```
    C     ---------------------------------------------------------------
    C     number of columns
    C     ---------------------------------------------------------------
          NCOLEF(1)=(XAPRIN-NXSTAR(2)+1)
    C     ---------------------------------------------------------------
    C     number of points
    C     ---------------------------------------------------------------
          NPTLEF(2)=NCOLEF(1)+1
    C     ---------------------------------------------------------------
    C     transfer coordinates
    C     ---------------------------------------------------------------
          DO 40 I=1,NCOLEF(1)
              NI=-I
              XCOL(1,NI,1)=XPOL(NPTLEF(2)+1-I,2)
              XCOL(1,NI,2)=XPOL(NPTLEF(2)+1-I,2)
              XCOL(1,NI,3)=XPOL(NPTLEF(2)-I,2)
              XCOL(1,NI,4)=XPOL(NPTLEF(2)-I,2)
              YCOL(1,NI,1)=A*XCOL(1,NI,1)+B
              YCOL(1,NI,2)=Y(NYSTAR)
              YCOL(1,NI,3)=Y(NYSTAR)
              YCOL(1,NI,4)=A*XCOL(1,NI,4)+B
    C     ---------------------------------------------------------------
    C     define xrow to be used
    C     ---------------------------------------------------------------
              XROW=XAPRIN+1-I
              YTESTE=YCOL(1,NI,1)
              CALL COORYZ (XROW,Y,Z,NY,YTESTE,ZFINAL,ALPHA)
              ZCOL(1,NI,1)=ZFINAL
              ZCOL(1,NI,2)=ZPOL(NPTLEF(2)+1-I,2)
              ZCOL(1,NI,3)=ZPOL(NPTLEF(2)-I,2)
              DO 10 M1=1,NSOIL
                  NNN=NPTLEF(2)+1-I
                  ZSOL(M1,1,NI,1)=ZCOL(1,NI,1)
                  ZSOL(M1,1,NI,2)=Z(M1,NNN+XDIFF(2),NYSTAR)
                  ZSOL(M1,1,NI,3)=Z(M1,NNN-1+XDIFF(2),NYSTAR)
   10         CONTINUE
              IF (XROW.EQ.NXSTAR(2)) THEN
                  ZCOL(1,NI,4)=ZPOL(1,2)
                  DO 20 M1=1,NSOIL
                      ZSOL(M1,1,NI,4)=ZCOL(1,NI,4)
   20             CONTINUE
              ELSE
                  YTESTE=YCOL(1,NI,4)
                  CALL COORYZ (XROW-1,Y,Z,NY,YTESTE,ZFINAL,ALPHA)
                  ZCOL(1,NI,4)=ZFINAL
                  DO 30 M1=1,NSOIL
                      ZSOL(M1,1,NI,4)=ZCOL(1,NI,4)
   30             CONTINUE
              END IF
   40     CONTINUE
          XPOL(1,1)=X(XAPRIN)
          ZPOL(1,1)=ZCOL(1,-1,1)
          NXPOL(1)=1
    C     ---------------------------------------------------------------
    C     Part 2 - FOR ALL NEXT SERIES OF COLUMNS - LEFT SIDE
    C                    ( 2nd to nypol-2 )
    C     ---------------------------------------------------------------
          DO 220 J=2,NYPOL-2
```

Line# Source Line Microsoft FORTRAN Optimizing Compiler Version 5.00

```
128  C     ---------------------------------------------------------------
129  C     check the number of points of the ith and the i+1 th
130  C     ---------------------------------------------------------------
131           NCOLEF(J)=(XAPRIN-NXSTAR(J)+1)
132           NCOLEF(J+1)=(XAPRIN-NXSTAR(J+1)+1)
133  C     ---------------------------------------------------------------
134  C     A) --> if number of points of j+1 > than j <---
135  C     ---------------------------------------------------------------
136           IF (NCOLEF(J+1).GT.NCOLEF(J)) THEN
137  C     ---------------------------------------------------------------
138  C     number of columns
139  C     ---------------------------------------------------------------
140                   NPTLEF(J)=NCOLEF(J)+1
141                   NPTLEF(J+1)=NCOLEF(J+1)+1
142  C     ---------------------------------------------------------------
143  C     calculate line that connects extremities
144  C     ---------------------------------------------------------------
145                   YTES1=YPOL(J+1)
146                   XTES1=XPOL(1,J+1)
147                   YTES2=YPOL(J)
148                   XTES2=XPOL(1,J)
149                   A=(YTES1-YTES2)/(XTES1-XTES2)
150                   B=YTES1-A*XTES1
151  C     ---------------------------------------------------------------
152  C     transfer coordinates
153  C     ---------------------------------------------------------------
154                   DO 110 II=1,NCOLEF(J+1)
155                       NI=-II
156                       NNJ=NPTLEF(J)+1-II
157                       NNJ1=NPTLEF(J+1)+1-II
158                       JJJ=NYSTAR+J-2
159                       JJJ1=NYSTAR+J+1-2
160                       XCOL(J,NI,1)=XPOL(NPTLEF(J+1)+1-II,J+1)
161                       XCOL(J,NI,2)=XPOL(NPTLEF(J+1)+1-II,J+1)
162                       XCOL(J,NI,3)=XPOL(NPTLEF(J+1)-II,J+1)
163                       XCOL(J,NI,4)=XPOL(NPTLEF(J+1)-II,J+1)
164                       IF (II.LE.NCOLEF(J)-1) THEN
165                           YCOL(J,NI,1)=YPOL(J)
166                           YCOL(J,NI,2)=YPOL(J+1)
167                           YCOL(J,NI,3)=YPOL(J+1)
168                           YCOL(J,NI,4)=YPOL(J)
169                       ELSE
170                           IF (II.EQ.NCOLEF(J)) THEN
171                               YCOL(J,NI,1)=YPOL(J)
172                           ELSE
173                               YCOL(J,NI,1)=A*XCOL(J,NI,1)+B
174                           END IF
175                           YCOL(J,NI,2)=YPOL(J+1)
176                           YCOL(J,NI,3)=YPOL(J+1)
177                           YCOL(J,NI,4)=A*XCOL(J,NI,4)+B
178                       END IF
179  C     ---------------------------------------------------------------
180  C     define xrow to be used
181  C     ---------------------------------------------------------------
182                       IF (II.LE.NCOLEF(J)-1) THEN
183                           ZCOL(J,NI,1)=ZPOL(NPTLEF(J)+1-II,J)
184                           ZCOL(J,NI,2)=ZPOL(NPTLEF(J+1)+1-II,J+1)
185                           ZCOL(J,NI,3)=ZPOL(NPTLEF(J+1)-II,J+1)
```

Line# Source Line Microsoft FORTRAN Optimizing Compiler Version 5.00

```
                        ZCOL(J,NI,4)=ZPOL(NPTLEF(J)-II,J)
                        DO 50 M1=1,NSOIL
                            ZSOL(M1,J,NI,1)=Z(M1,NNJ+XDIFF(J),JJJ)
                            ZSOL(M1,J,NI,2)=Z(M1,NNJ1+XDIFF(J+1),JJJ1)
                            ZSOL(M1,J,NI,3)=Z(M1,NNJ1-1+XDIFF(J+1),JJJ1)
                            ZSOL(M1,J,NI,4)=Z(M1,NNJ-1+XDIFF(J),JJJ)
 50                     CONTINUE
                    ELSE
                        IF (II.EQ.NCOLEF(J)) THEN
                            ZCOL(J,NI,1)=ZCOL(J,NI+1,4)
                            DO 60 M1=1,NSOIL
                                ZSOL(M1,J,NI,1)=ZSOL(M1,J,NI+1,4)
 60                         CONTINUE
                        ELSE
                            XROW=XAPRIN+1-II
                            YTESTE=YCOL(J,NI,1)
                            CALL COORYZ (XROW,Y,Z,NY,YTESTE,ZFINAL,ALPHA)
                            ZCOL(J,NI,1)=ZFINAL
                            DO 70 M1=1,NSOIL
                                ZSOL(M1,J,NI,1)=ZFINAL
 70                         CONTINUE
                        END IF
                        ZCOL(J,NI,2)=ZPOL(NPTLEF(J+1)+1-II,J+1)
                        ZCOL(J,NI,3)=ZPOL(NPTLEF(J+1)-II,J+1)
                        DO 80 M1=1,NSOIL
                            ZSOL(M1,J,NI,2)=Z(M1,NNJ1+XDIFF(J+1),JJJ1)
                            ZSOL(M1,J,NI,3)=Z(M1,NNJ1-1+XDIFF(J+1),JJJ1)
 80                     CONTINUE
                        XROW=XAPRIN+1-II
                        IF (XROW.EQ.NXSTAR(J+1)) THEN
                            ZCOL(J,NI,4)=ZPOL(1,J+1)
                            DO 90 M1=1,NSOIL
                                ZSOL(M1,J,NI,4)=ZPOL(1,J+1)
 90                         CONTINUE
                        ELSE
                            YTESTE=YCOL(J,NI,4)
                            CALL COORYZ (XROW-1,Y,Z,NY,YTESTE,ZFINAL,
     1                       ALPHA)
                            ZCOL(J,NI,4)=ZFINAL
                            DO 100 M1=1,NSOIL
                                ZSOL(M1,J,NI,4)=ZFINAL
 100                        CONTINUE
                        END IF
                    END IF
 110            CONTINUE
C     ---------------------------------------------------------------
C     Here ends the condition J+1 > j
C     ---------------------------------------------------------------
            END IF
C     ---------------------------------------------------------------
C     B) --> if number of points of j+1 = number of points of j
C     ---------------------------------------------------------------
            IF (NCOLEF(J+1).EQ.NCOLEF(J)) THEN
C     ---------------------------------------------------------------
C     number of points
C     ---------------------------------------------------------------
                NPTLEF(J)=NCOLEF(J)+1
                NPTLEF(J+1)=NCOLEF(J+1)+1
```

Line# Source Line Microsoft FORTRAN Optimizing Compiler Version 5.00

```
244  C     ------------------------------------------------------------
245  C     transfer coordinates
246  C     ------------------------------------------------------------
247                DO 130 II=1,NCOLEF(J+1)
248                    NI=-II
249                    NNJ=NPTLEF(J)+1-II
250                    NNJ1=NPTLEF(J+1)+1-II
251                    JJJ=NYSTAR+J-2
252                    JJJ1=NYSTAR+J+1-2
253                    XCOL(J,NI,1)=XPOL(NPTLEF(J)+1-II,J)
254                    XCOL(J,NI,2)=XPOL(NPTLEF(J+1)+1-II,J+1)
255                    XCOL(J,NI,3)=XPOL(NPTLEF(J+1)-II,J+1)
256                    XCOL(J,NI,4)=XPOL(NPTLEF(J)-II,J)
257                    YCOL(J,NI,1)=YPOL(J)
258                    YCOL(J,NI,2)=YPOL(J+1)
259                    YCOL(J,NI,3)=YPOL(J+1)
260                    YCOL(J,NI,4)=YPOL(J)
261                    ZCOL(J,NI,1)=ZPOL(NPTLEF(J)+1-II,J)
262                    ZCOL(J,NI,2)=ZPOL(NPTLEF(J+1)+1-II,J+1)
263                    ZCOL(J,NI,3)=ZPOL(NPTLEF(J+1)-II,J+1)
264                    ZCOL(J,NI,4)=ZPOL(NPTLEF(J)-II,J)
265                    DO 120 M1=1,NSOIL
266                        ZSOL(M1,J,NI,1)=Z(M1,NNJ+XDIFF(J),JJJ)
267                        ZSOL(M1,J,NI,2)=Z(M1,NNJ1+XDIFF(J+1),JJJ1)
268                        IF (II.NE.NCOLEF(J+1)) THEN
269                            ZSOL(M1,J,NI,3)=Z(M1,NNJ1-1+XDIFF(J+1),JJJ1)
270                            ZSOL(M1,J,NI,4)=Z(M1,NNJ-1+XDIFF(J),JJJ)
271                        ELSE
272                            ZSOL(M1,J,NI,3)=ZCOL(J,NI,3)
273                            ZSOL(M1,J,NI,4)=ZCOL(J,NI,4)
274                        END IF
275   120              CONTINUE
276   130          CONTINUE
277  C     ------------------------------------------------------------
278  C     Here ends the condition j+1 = j
279  C     ------------------------------------------------------------
280           END IF
281  C     ------------------------------------------------------------
282  C     A) --> if number of points of j+1 < than j <---
283  C     ------------------------------------------------------------
284           IF (NCOLEF(J+1).LT.NCOLEF(J)) THEN
285  C     ------------------------------------------------------------
286  C     number of points
287  C     ------------------------------------------------------------
288                NPTLEF(J)=NCOLEF(J)+1
289                NPTLEF(J+1)=NCOLEF(J+1)+1
290  C     ------------------------------------------------------------
291  C     calculate line that connects extremities
292  C     ------------------------------------------------------------
293                YTES1=YPOL(J+1)
294                XTES1=XPOL(1,J+1)
295                YTES2=YPOL(J)
296                XTES2=XPOL(1,J)
297                A=(YTES1-YTES2)/(XTES1-XTES2)
298                B=YTES1-A*XTES1
299  C     ------------------------------------------------------------
300  C     transfer coordinates
301  C     ------------------------------------------------------------
```

Line# Source Line Microsoft FORTRAN Optimizing Compiler Version 5.00

```
                DO 210 II=1,NCOLEF(J)
                    NI=-II
                    NNJ=NPTLEF(J)+1-II
                    NNJ1=NPTLEF(J+1)+1-II
                    JJJ=NYSTAR+J-2
                    JJJ1=NYSTAR+J+1-2
                    XCOL(J,NI,1)=XPOL(NPTLEF(J)+1-II,J)
                    XCOL(J,NI,2)=XPOL(NPTLEF(J)+1-II,J)
                    XCOL(J,NI,3)=XPOL(NPTLEF(J)-II,J)
                    XCOL(J,NI,4)=XPOL(NPTLEF(J)-II,J)
                    IF (II.LE.NCOLEF(J+1)-1) THEN
                        YCOL(J,NI,1)=YPOL(J)
                        YCOL(J,NI,2)=YPOL(J+1)
                        YCOL(J,NI,3)=YPOL(J+1)
                        YCOL(J,NI,4)=YPOL(J)
                    ELSE
                        YCOL(J,NI,1)=YPOL(J)
                        IF (II.EQ.NCOLEF(J+1)) THEN
                            YCOL(J,NI,2)=YPOL(J+1)
                        ELSE
                            YCOL(J,NI,2)=A*XCOL(J,NI,2)+B
                        END IF
                        YCOL(J,NI,3)=A*XCOL(J,NI,3)+B
                        YCOL(J,NI,4)=YPOL(J)
                    END IF
C     ------------------------------------------------------------
C     define xrow to be used
C     ------------------------------------------------------------
                    IF (II.LE.NCOLEF(J+1)-1) THEN
                        ZCOL(J,NI,1)=ZPOL(NPTLEF(J)+1-II,J)
                        ZCOL(J,NI,2)=ZPOL(NPTLEF(J+1)+1-II,J+1)
                        ZCOL(J,NI,3)=ZPOL(NPTLEF(J+1)-II,J+1)
                        ZCOL(J,NI,4)=ZPOL(NPTLEF(J)-II,J)
                        DO 140 M1=1,NSOIL
                            ZSOL(M1,J,NI,1)=Z(M1,NNJ+XDIFF(J),JJJ)
                            ZSOL(M1,J,NI,2)=Z(M1,NNJ1+XDIFF(J+1),JJJ1)
                            ZSOL(M1,J,NI,3)=Z(M1,NNJ1-1+XDIFF(J+1),JJJ1)
                            ZSOL(M1,J,NI,4)=Z(M1,NNJ-1+XDIFF(J),JJJ)
140                     CONTINUE
                    ELSE
                        ZCOL(J,NI,1)=ZPOL(NPTLEF(J)+1-II,J)
                        DO 150 M1=1,NSOIL
                            ZSOL(M1,J,NI,1)=Z(M1,NNJ+XDIFF(J),JJJ)
150                     CONTINUE
                        XROW=XAPRIN+1-II
                        IF (II.EQ.NCOLEF(J+1)) THEN
                            ZCOL(J,NI,2)=ZCOL(J,NI+1,3)
                            DO 160 M1=1,NSOIL
                                ZSOL(M1,J,NI,2)=ZSOL(M1,J,NI+1,3)
160                         CONTINUE
                        ELSE
                            YTESTE=YCOL(J,NI,2)
                            CALL COORYZ (XROW,Y,Z,NY,YTESTE,ZFINAL,ALPHA)
                            ZCOL(J,NI,2)=ZFINAL
                            DO 170 M1=1,NSOIL
                                ZSOL(M1,J,NI,2)=ZFINAL
170                         CONTINUE
                        END IF
```

Line# Source Line Microsoft FORTRAN Optimizing Compiler Version 5.00

```
360                         IF (XROW.EQ.NXSTAR(J)) THEN
361                             ZCOL(J,NI,3)=ZPOL(1,J)
362                             DO 180 M1=1,NSOIL
363                                 ZSOL(M1,J,NI,3)=ZPOL(1,J)
364  180                        CONTINUE
365                         ELSE
366                             YTESTE=YCOL(J,NI,3)
367                             CALL COORYZ (XROW-1,Y,Z,NY,YTESTE,ZFINAL,
368       1                      ALPHA)
369                             ZCOL(J,NI,3)=ZFINAL
370                             DO 190 M1=1,NSOIL
371                                 ZSOL(M1,J,NI,3)=ZFINAL
372  190                        CONTINUE
373                         END IF
374                     END IF
375                     ZCOL(J,NI,4)=ZPOL(NPTLEF(J)-II,J)
376                     DO 200 M1=1,NSOIL
377                         ZSOL(M1,J,NI,4)=Z(M1,NNJ-1+XDIFF(J),JJJ)
378  200                CONTINUE
379  210            CONTINUE
380  C      ------------------------------------------------------------------
381  C      Here ends the condition J+1 < j
382  C      ------------------------------------------------------------------
383              END IF
384  C      ------------------------------------------------------------------
385  C      This label 3 ends the process for the left side
386  C      ------------------------------------------------------------------
387   220   CONTINUE
388  C      ------------------------------------------------------------------
389  C      PART 3 - LAST SERIES OF COLUMNS - LEFT SIDE
390  C      ------------------------------------------------------------------
391          YTES1=YPA2
392          XTES1=X(XAPRIN)
393          YTES2=YPOL(NYPOL-1)
394          XTES2=XPOL(1,NYPOL-1)
395          A=(YTES1-YTES2)/(XTES1-XTES2)
396          B=YTES1-A*XTES1
397  C      ------------------------------------------------------------------
398  C      number of columns
399  C      ------------------------------------------------------------------
400          NCOLEF(NYPOL-1)=(XAPRIN-NXSTAR(NYPOL-1)+1)
401  C      ------------------------------------------------------------------
402  C      number of points
403  C      ------------------------------------------------------------------
404          NPTLEF(NYPOL-1)=NCOLEF(NYPOL-1)+1
405          NPPOL=NYPOL-1
406  C      ------------------------------------------------------------------
407  C      transfer coordinates
408  C      ------------------------------------------------------------------
409          DO 280 I=1,NCOLEF(NPPOL)
410              NI=-I
411              NNJ=NPTLEF(NPPOL)+1-I
412              JJJ=NYSTAR+NPPOL-2
413              XCOL(NPPOL,NI,1)=XPOL(NPTLEF(NPPOL)+1-I,NPPOL)
414              XCOL(NPPOL,NI,2)=XPOL(NPTLEF(NPPOL)+1-I,NPPOL)
415              XCOL(NPPOL,NI,3)=XPOL(NPTLEF(NPPOL)-I,NPPOL)
416              XCOL(NPPOL,NI,4)=XPOL(NPTLEF(NPPOL)-I,NPPOL)
417              YCOL(NPPOL,NI,1)=YPOL(NPPOL)
```

Line# Source Line Microsoft FORTRAN Optimizing Compiler Version 5.00

```
   418            YCOL(NPPOL,NI,2)=A*XCOL(NPPOL,NI,2)+B
   419            YCOL(NPPOL,NI,3)=A*XCOL(NPPOL,NI,3)+B
   420            YCOL(NPPOL,NI,4)=YPOL(NPPOL)
   421  C      ---------------------------------------------------------------
   422  C      define xrow to be used
   423  C      ---------------------------------------------------------------
   424            ZCOL(NPPOL,NI,1)=ZPOL(NPTLEF(NPPOL)+1-I,NPPOL)
   425            DO 230 M1=1,NSOIL
   426                ZSOL(M1,NPPOL,NI,1)=Z(M1,NNJ+XDIFF(NPPOL),JJJ)
   427   230      CONTINUE
   428            XROW=XAPRIN+1-I
   429            YTESTE=YCOL(NPPOL,NI,2)
   430            CALL COORYZ (XROW,Y,Z,NY,YTESTE,ZFINAL,ALPHA)
   431            ZCOL(NPPOL,NI,2)=ZFINAL
   432            DO 240 M1=1,NSOIL
   433                ZSOL(M1,NPPOL,NI,2)=ZFINAL
   434   240      CONTINUE
   435            IF (XROW.EQ.NXSTAR(NPPOL)) THEN
   436                ZCOL(NPPOL,NI,3)=ZPOL(1,NPPOL)
   437                DO 250 M1=1,NSOIL
   438                    ZSOL(M1,NPPOL,NI,3)=ZPOL(1,NPPOL)
   439   250          CONTINUE
   440            ELSE
   441                YTESTE=YCOL(NPPOL,NI,3)
   442                CALL COORYZ (XROW-1,Y,Z,NY,YTESTE,ZFINAL,ALPHA)
   443                ZCOL(NPPOL,NI,3)=ZFINAL
   444                DO 260 M1=1,NSOIL
   445                    ZSOL(M1,NPPOL,NI,3)=ZFINAL
   446   260          CONTINUE
   447            END IF
   448            ZCOL(NPPOL,NI,4)=ZPOL(NPTLEF(NPPOL)-I,NPPOL)
   449            DO 270 M1=1,NSOIL
   450                ZSOL(M1,NPPOL,NI,4)=Z(M1,NNJ-1+XDIFF(NPPOL),JJJ)
   451   270      CONTINUE
   452   280  CONTINUE
   453  C      ---------------------------------------------------------------
   454  C      The left side calculations have finished
   455  C      ---------------------------------------------------------------
   456        RETURN
   457        END
```

COLUML Local Symbols

Name	Class	Type	Size	Offset
NPPOL	param			0006
NSOIL	param			000a
XDIFF	param			000e
ZSOL	param			0012
ZPOL	param			0016
NPTLEF	param			001a
NCOLEF	param			001e
ZCOL	param			0022
YCOL	param			0026
XCOL	param			002a
YPOL	param			002e
XPOL	param			0032

COLUML Local Symbols

Name	Class	Type	Size	Offset
NXPOL	param			0036
NXSTAR	param			003a
XIPOL	param			003e
XAPRIN	param			0042
Z	param			0046
Y	param			004a
X	param			004e
NYPOL	param			0052
NYSTAR	param			0056
YPA2	param			005a
YPA1	param			005e
A	local	REAL*4	4	0000
B	local	REAL*4	4	0004
ZFINAL	local	REAL*4	4	0008
I	local	INTEGER*4	4	000c
J	local	INTEGER*4	4	0010
JJJ1	local	INTEGER*4	4	0014
XROW	local	INTEGER*4	4	0018
II	local	INTEGER*4	4	001c
NNJ1	local	INTEGER*4	4	0020
NI	local	INTEGER*4	4	0024
JJJ	local	INTEGER*4	4	0028
YTESTE	local	REAL*4	4	002c
NNJ	local	INTEGER*4	4	0030
ALPHA	local	REAL*4	4	0034
NY	local	INTEGER*4	4	0038
NNN	local	INTEGER*4	4	003c
XTES1	local	REAL*4	4	0040
XTES2	local	REAL*4	4	0044
YTES1	local	REAL*4	4	0048
YTES2	local	REAL*4	4	004c
M1	local	INTEGER*4	4	0050

Symbolic Constant	Type	Value
MCOORD	INTEGER*4	25
MSOIL	INTEGER*4	5
NUMCOL	INTEGER*4	10
NCORN	INTEGER*4	4
MAXSUR	INTEGER*4	2000

Global Symbols

Name	Class	Type	Size	Offset
COLUML	FSUBRT	***	***	0000
COORYZ	extern	***	***	***

Code size = 2e5e (11870)
Data size = 0000 (0)

Bss size = 0054 (84)

No errors detected

```
^H                                                                    PAGE   1
                                                                   04-12-91
                                                                   12:06:50

Line#  Source Line          Microsoft FORTRAN Optimizing Compiler Version 5.00

     1  $title:'PCSTBL3D v2.0'
     2  $subtitle:'Left Side Columns'
     3  C This subroutine calculates cordinates of colulmns for the right side
     4  C-----------------------------------------------------------------------
     5        SUBROUTINE COLUMR (YPA1,YPA2,NYSTAR,NYPOL,NPPOL,X,Y,Z,XAPRIN,
     6       1XFPOL,NXSTAR,NXPOL,XPOL,YPOL,ZPOL,XCOL,YCOL,ZCOL,NCOLEF,NCORIG,
     7       2NPTLEF,NPTRIG,NXEND,ZSOL,XDIFF,NSOIL)
     8  $include:'CURRENTF.INC'
      ***** Begin listing of: CURRENTF.INC
     1  *
     2  *======================== Prologue ====================================
     3  *
     4  * Purpose:
     5  *    Include file with parameter declaration for the program PCSTL3D
     6  *
     7  * History:
     8  *    Version         Programmer     Date          Description
     9  *    -------         ----------     ----          -----------
    10  *    1.0             G.Moshkovich                 created
    11  *
    12  * IN args/commons           Units            Description
    13  * ---------------           -----            -----------
    14  *
    15  * OUT args/commons          Units            Description
    16  * ----------------          -----            -----------
    17  *
    18  * INOUT args/commons        Units            Description
    19  * ------------------        -----            -----------
    20  *
    21  * Processing:
    22  *    none
    23  *
    24  * Special Requirements:
    25  *    none
    26  *
    27  *------------------------- Include files -------------------------------
    28  *------------------------- Constant declarations -----------------------
    29        integer MCOORD, MSOIL, NUMCOL, NCORN
    30
    31        parameter (MCOORD = 25, MSOIL = 5)
    32        parameter (NUMCOL = 10, NCORN = 4)
    33        PARAMETER (MAXSUR=2000)
    34
    35  *------- MCOORD - maximum number of points in each direction
    36  *------- MSOIL -  maximum number of soil layers
    37  *------- NUMCOL - maximum number of generated columns
    38  *------- NCORN - number of nods for each column (do not change)
    39
    40  *------------------------- Argument declarations -----------------------
    41  *------------------------- Global/External declarations ----------------
    42  *------------------------- Local declarations --------------------------
    43
    44
    45
      ***** End listing of: CURRENTF.INC
     9        DIMENSION X(MCOORD), Y(MCOORD), Z(MSOIL,MCOORD,MCOORD),
    10       1XFPOL(MCOORD), NXPOL(MCOORD), NXSTAR(MCOORD), NXEND(MCOORD),
    11       2XPOL(MCOORD,MCOORD), ZPOL(MCOORD,MCOORD), YPOL(MCOORD),
```

Line# Source Line Microsoft FORTRAN Optimizing Compiler Version 5.00

```
12          3XCOL(MCOORD,-NUMCOL:NUMCOL,NCORN), YCOL(MCOORD,-NUMCOL:NUMCOL,
13          4NCORN), ZCOL(MCOORD,-NUMCOL:NUMCOL,NCORN), NCOLEF(MCOORD),
14          5NPTLEF(MCOORD), NCORIG(MCOORD), NPTRIG(MCOORD), ZSOL(MSOIL,MCOORD
15          6-NUMCOL:NUMCOL,NCORN)
16           INTEGER XAPRIN,XROW,XDIFF(MCOORD)
17           XPOL(1,NYPOL)=X(XAPRIN)
18           ZPOL(1,NYPOL)=ZCOL(NPPOL,-1,2)
19           NXPOL(NYPOL)=1
20    C      ------------------------------------------------------------
21    C      PART 4 - 1st SERIES OF COLUMNS - RIGHT SIDE
22    C      ------------------------------------------------------------
23           YTES1=YPA1
24           XTES1=X(XAPRIN)
25           YTES2=Y(NYSTAR)
26           XTES2=XFPOL(2)
27           A=(YTES1-YTES2)/(XTES1-XTES2)
28           B=YTES1-A*XTES1
29    C      ------------------------------------------------------------
30    C      number of columns
31    C      ------------------------------------------------------------
32           NCORIG(1)=NXEND(2)-XAPRIN+1
33    C      ------------------------------------------------------------
34    C      number of points
35    C      ------------------------------------------------------------
36           NPTLEF(2)=(XAPRIN-NXSTAR(2)+2)
37           NPTRIG(2)=NCORIG(1)+1
38    C      ------------------------------------------------------------
39    C      transfer coordinates
40    C      ------------------------------------------------------------
41           DO 30 I=1,NCORIG(1)
42               NI=I
43               XCOL(1,NI,1)=XPOL(NPTLEF(2)+I,2)
44               XCOL(1,NI,2)=XPOL(NPTLEF(2)+I,2)
45               XCOL(1,NI,3)=XPOL(NPTLEF(2)-1+I,2)
46               XCOL(1,NI,4)=XPOL(NPTLEF(2)-1+I,2)
47               YCOL(1,NI,1)=A*XCOL(1,NI,1)+B
48               YCOL(1,NI,2)=Y(NYSTAR)
49               YCOL(1,NI,3)=Y(NYSTAR)
50               YCOL(1,NI,4)=A*XCOL(1,NI,4)+B
51    C      ------------------------------------------------------------
52    C      define xrow to be used
53    C      ------------------------------------------------------------
54               XROW=XAPRIN+I
55               YTESTE=YCOL(1,NI,1)
56               CALL COORYZ (XROW,Y,Z,NY,YTESTE,ZFINAL,ALPHA)
57               ZCOL(1,NI,1)=ZFINAL
58               ZCOL(1,NI,2)=ZPOL(NPTLEF(2)+I,2)
59               ZCOL(1,NI,3)=ZPOL(NPTLEF(2)-1+I,2)
60               DO 10 M1=1,NSOIL
61                   NNN=NPTLEF(2)+I
62                   ZSOL(M1,1,NI,1)=ZCOL(1,NI,1)
63                   ZSOL(M1,1,NI,2)=Z(M1,NNN+XDIFF(2),NYSTAR)
64                   ZSOL(M1,1,NI,3)=Z(M1,NNN-1+XDIFF(2),NYSTAR)
65     10        CONTINUE
66               YTESTE=YCOL(1,NI,4)
67               CALL COORYZ (XROW-1,Y,Z,NY,YTESTE,ZFINAL,ALPHA)
68               ZCOL(1,NI,4)=ZFINAL
69               DO 20 M1=1,NSOIL
```

Line# Source Line Microsoft FORTRAN Optimizing Compiler Version 5.00

```
    70                ZSOL(M1,1,NI,4)=ZCOL(1,NI,4)
    71   20       CONTINUE
    72   30   CONTINUE
    73  C     ---------------------------------------------------------------
    74  C     Part 5 - FOR ALL NEXT SERIES OF COLUMNS - RIGHT SIDE
    75  C                     ( 2nd to nypol-2 )
    76  C     ---------------------------------------------------------------
    77        DO 210 J=2,NYPOL-2
    78            NCOLEF(J)=(XAPRIN-NXSTAR(J)+1)
    79            NCOLEF(J+1)=(XAPRIN-NXSTAR(J+1)+1)
    80            NPTLEF(J)=(XAPRIN-NXSTAR(J)+2)
    81            NPTLEF(J+1)=(XAPRIN-NXSTAR(J+1)+2)
    82  C     ---------------------------------------------------------------
    83  C     check the number of points of the ith and the i+1 th
    84  C     ---------------------------------------------------------------
    85            NCORIG(J)=-(XAPRIN-NXEND(J))+1
    86            NCORIG(J+1)=-(XAPRIN-NXEND(J+1))+1
    87  C     ---------------------------------------------------------------
    88  C     A) --> if number of points of j+1 > than j <---
    89  C     ---------------------------------------------------------------
    90            IF (NCORIG(J+1).GT.NCORIG(J)) THEN
    91  C     ---------------------------------------------------------------
    92  C     number of POINTS
    93  C     ---------------------------------------------------------------
    94                  NPTRIG(J)=NCORIG(J)+1
    95                  NPTRIG(J+1)=NCORIG(J+1)+1
    96  C     ---------------------------------------------------------------
    97  C     calculate line that connects extremities
    98  C     ---------------------------------------------------------------
    99                  YTES1=YPOL(J+1)
   100                  XTES1=XPOL(NXPOL(J+1),J+1)
   101                  YTES2=YPOL(J)
   102                  XTES2=XPOL(NXPOL(J),J)
   103                  A=(YTES1-YTES2)/(XTES1-XTES2)
   104                  B=YTES1-A*XTES1
   105  C     ---------------------------------------------------------------
   106  C     transfer coordinates
   107  C     ---------------------------------------------------------------
   108                  DO 100 II=1,NCORIG(J+1)
   109                      NI=II
   110                      NNJ=NPTLEF(J)+II
   111                      NNJ1=NPTLEF(J+1)+II
   112                      JJJ=NYSTAR+J-2
   113                      JJJ1=NYSTAR+J+1-2
   114                      XCOL(J,NI,1)=XPOL(NPTLEF(J+1)+II,J+1)
   115                      XCOL(J,NI,2)=XPOL(NPTLEF(J+1)+II,J+1)
   116                      XCOL(J,NI,3)=XPOL(NPTLEF(J+1)-1+II,J+1)
   117                      XCOL(J,NI,4)=XPOL(NPTLEF(J+1)-1+II,J+1)
   118                      IF (II.LE.NCORIG(J)-1) THEN
   119                          YCOL(J,NI,1)=YPOL(J)
   120                          YCOL(J,NI,2)=YPOL(J+1)
   121                          YCOL(J,NI,3)=YPOL(J+1)
   122                          YCOL(J,NI,4)=YPOL(J)
   123                      ELSE
   124                          YCOL(J,NI,1)=A*XCOL(J,NI,1)+B
   125                          YCOL(J,NI,2)=YPOL(J+1)
   126                          YCOL(J,NI,3)=YPOL(J+1)
   127                          IF (II.EQ.NCORIG(J)) THEN
```

Line# Source Line Microsoft FORTRAN Optimizing Compiler Version 5.00

```
                            YCOL(J,NI,4)=YPOL(J)
                        ELSE
                            YCOL(J,NI,4)=A*XCOL(J,NI,4)+B
                        END IF
                    END IF
C     ---------------------------------------------------------------
C     define xrow to be used
C     ---------------------------------------------------------------
                    IF (II.LE.NCORIG(J)-1) THEN
                        ZCOL(J,NI,1)=ZPOL(NPTLEF(J)+II,J)
                        ZCOL(J,NI,2)=ZPOL(NPTLEF(J+1)+II,J+1)
                        ZCOL(J,NI,3)=ZPOL(NPTLEF(J+1)-1+II,J+1)
                        ZCOL(J,NI,4)=ZPOL(NPTLEF(J)-1+II,J)
                        DO 40 M1=1,NSOIL
                            ZSOL(M1,J,NI,1)=Z(M1,NNJ+XDIFF(J),JJJ)
                            ZSOL(M1,J,NI,2)=Z(M1,NNJ1+XDIFF(J+1),JJJ1)
                            ZSOL(M1,J,NI,3)=Z(M1,NNJ1-1+XDIFF(J+1),JJJ1)
                            ZSOL(M1,J,NI,4)=Z(M1,NNJ-1+XDIFF(J),JJJ)
40                      CONTINUE
                    ELSE
                        IF (II.EQ.NCORIG(J)) THEN
                            ZCOL(J,NI,4)=ZCOL(J,NI-1,1)
                            DO 50 M1=1,NSOIL
                                ZSOL(M1,J,NI,4)=ZSOL(M1,J,NI-1,1)
50                          CONTINUE
                        ELSE
                            XROW=XAPRIN-1+II
                            YTESTE=YCOL(J,NI,4)
                            CALL COORYZ (XROW,Y,Z,NY,YTESTE,ZFINAL,ALPHA)
                            ZCOL(J,NI,4)=ZFINAL
                            DO 60 M1=1,NSOIL
                                ZSOL(M1,J,NI,4)=ZFINAL
60                          CONTINUE
                        END IF
                        ZCOL(J,NI,2)=ZPOL(NPTRIG(J+1)+II,J+1)
                        ZCOL(J,NI,3)=ZPOL(NPTRIG(J+1)-1+II,J+1)
                        DO 70 M1=1,NSOIL
                            ZSOL(M1,J,NI,2)=Z(M1,NNJ1+XDIFF(J+1),JJJ1)
                            ZSOL(M1,J,NI,3)=Z(M1,NNJ1-1+XDIFF(J+1),JJJ1)
70                      CONTINUE
                        XROW=XAPRIN-1+II
                        IF (XROW.EQ.NXEND(J+1)) THEN
                            ZCOL(J,NI,1)=ZPOL(NXPOL(J+1),J+1)
                            DO 80 M1=1,NSOIL
                                ZSOL(M1,J,NI,1)=ZPOL(NXPOL(J+1),J+1)
80                          CONTINUE
                        ELSE
                            YTESTE=YCOL(J,NI,1)
                            CALL COORYZ (XROW+1,Y,Z,NY,YTESTE,ZFINAL,
     1                      ALPHA)
                            ZCOL(J,NI,1)=ZFINAL
                            DO 90 M1=1,NSOIL
                                ZSOL(M1,J,NI,1)=ZFINAL
90                          CONTINUE
                        END IF
                    END IF
100             CONTINUE
                NCORIG(J)=-(XAPRIN-NXEND(J+1))+1
```

Line# Source Line Microsoft FORTRAN Optimizing Compiler Version 5.00

```
                NCOLEF(J)=XAPRIN-NXSTAR(J+1)+1
                GO TO 210
C     ---------------------------------------------------------------
C     Here ends the condition J+1 > j
C     ---------------------------------------------------------------
            END IF
C     ---------------------------------------------------------------
C     B) --> if number of points of j+1 = number of points of j
C     ---------------------------------------------------------------
            IF (NCORIG(J+1).EQ.NCORIG(J)) THEN
C     ---------------------------------------------------------------
C     number of points
C     ---------------------------------------------------------------
                NPTRIG(J)=NCORIG(J)+1
                NPTRIG(J+1)=NCORIG(J+1)+1
C     ---------------------------------------------------------------
C     transfer coordinates
C     ---------------------------------------------------------------
                DO 120 II=1,NCORIG(J+1)
                    NI=II
                    NNJ=NPTLEF(J)+II
                    NNJ1=NPTLEF(J+1)+II
                    JJJ=NYSTAR+J-2
                    JJJ1=NYSTAR+J+1-2
                    XCOL(J,NI,1)=XPOL(NPTLEF(J)+II,J)
                    XCOL(J,NI,2)=XPOL(NPTLEF(J+1)+II,J+1)
                    XCOL(J,NI,3)=XPOL(NPTLEF(J+1)-1+II,J+1)
                    XCOL(J,NI,4)=XPOL(NPTLEF(J)-1+II,J)
                    YCOL(J,NI,1)=YPOL(J)
                    YCOL(J,NI,2)=YPOL(J+1)
                    YCOL(J,NI,3)=YPOL(J+1)
                    YCOL(J,NI,4)=YPOL(J)
                    ZCOL(J,NI,1)=ZPOL(NPTLEF(J)+II,J)
                    ZCOL(J,NI,2)=ZPOL(NPTLEF(J+1)+II,J+1)
                    ZCOL(J,NI,3)=ZPOL(NPTLEF(J+1)-1+II,J+1)
                    ZCOL(J,NI,4)=ZPOL(NPTLEF(J)-1+II,J)
                    DO 110 M1=1,NSOIL
                        IF (II.NE.NCORIG(J+1)) THEN
                            ZSOL(M1,J,NI,1)=Z(M1,NNJ+XDIFF(J),JJJ)
                            ZSOL(M1,J,NI,2)=Z(M1,NNJ1+XDIFF(J+1),JJJ1)
                        ELSE
                            ZSOL(M1,J,NI,1)=ZCOL(J,NI,1)
                            ZSOL(M1,J,NI,2)=ZCOL(J,NI,2)
                        END IF
                        ZSOL(M1,J,NI,3)=Z(M1,NNJ1-1+XDIFF(J+1),JJJ1)
                        ZSOL(M1,J,NI,4)=Z(M1,NNJ-1+XDIFF(J),JJJ)
 110                CONTINUE
 120            CONTINUE
C     ---------------------------------------------------------------
C     Here ends the condition j+1 = j
C     ---------------------------------------------------------------
            END IF
C     ---------------------------------------------------------------
C     A) --> if number of points of j+1 < than j <---
C     ---------------------------------------------------------------
            IF (NCORIG(J+1).LT.NCORIG(J)) THEN
C     ---------------------------------------------------------------
C     number of points
```

Line# Source Line Microsoft FORTRAN Optimizing Compiler Version 5.00

```
  244  C     ---------------------------------------------------------------
  245                NPTRIG(J)=NCORIG(J)+1
  246                NPTRIG(J+1)=NCORIG(J+1)+1
  247  C     ---------------------------------------------------------------
  248  C     calculate line that connects extremities
  249  C     ---------------------------------------------------------------
  250                YTES1=YPOL(J+1)
  251                XTES1=XPOL(NXPOL(J+1),J+1)
  252                YTES2=YPOL(J)
  253                XTES2=XPOL(NXPOL(J),J)
  254                A=(YTES1-YTES2)/(XTES1-XTES2)
  255                B=YTES1-A*XTES1
  256  C     ---------------------------------------------------------------
  257  C     transfer coordinates
  258  C     ---------------------------------------------------------------
  259                DO 200 II=1,NCORIG(J)
  260                    NI=II
  261                    NNJ=NPTLEF(J)+II
  262                    NNJ1=NPTLEF(J+1)+II
  263                    JJJ=NYSTAR+J-2
  264                    JJJ1=NYSTAR+J+1-2
  265                    XCOL(J,NI,1)=XPOL(NPTLEF(J)+II,J)
  266                    XCOL(J,NI,2)=XPOL(NPTLEF(J)+II,J)
  267                    XCOL(J,NI,3)=XPOL(NPTLEF(J)-1+II,J)
  268                    XCOL(J,NI,4)=XPOL(NPTLEF(J)-1+II,J)
  269                    IF (II.LE.NCORIG(J+1)-1) THEN
  270                        YCOL(J,NI,1)=YPOL(J)
  271                        YCOL(J,NI,2)=YPOL(J+1)
  272                        YCOL(J,NI,3)=YPOL(J+1)
  273                        YCOL(J,NI,4)=YPOL(J)
  274                    ELSE
  275                        YCOL(J,NI,4)=YPOL(J)
  276                        IF (II.EQ.NCORIG(J+1)) THEN
  277                            YCOL(J,NI,3)=YPOL(J+1)
  278                        ELSE
  279                            YCOL(J,NI,3)=A*XCOL(J,NI,3)+B
  280                        END IF
  281                        YCOL(J,NI,2)=A*XCOL(J,NI,2)+B
  282                        YCOL(J,NI,1)=YPOL(J)
  283                    END IF
  284  C     ---------------------------------------------------------------
  285  C     define xrow to be used
  286  C     ---------------------------------------------------------------
  287                    IF (II.LE.NCORIG(J+1)-1) THEN
  288                        ZCOL(J,NI,1)=ZPOL(NPTLEF(J)+II,J)
  289                        ZCOL(J,NI,2)=ZPOL(NPTLEF(J+1)+II,J+1)
  290                        ZCOL(J,NI,3)=ZPOL(NPTLEF(J+1)-1+II,J+1)
  291                        ZCOL(J,NI,4)=ZPOL(NPTLEF(J)-1+II,J)
  292                        DO 130 M1=1,NSOIL
  293                            ZSOL(M1,J,NI,1)=Z(M1,NNJ+XDIFF(J),JJJ)
  294                            ZSOL(M1,J,NI,2)=Z(M1,NNJ1+XDIFF(J+1),JJJ1)
  295                            ZSOL(M1,J,NI,3)=Z(M1,NNJ1-1+XDIFF(J+1),JJJ1)
  296                            ZSOL(M1,J,NI,4)=Z(M1,NNJ-1+XDIFF(J),JJJ)
  297   130                  CONTINUE
  298                    ELSE
  299                        ZCOL(J,NI,4)=ZPOL(NPTLEF(J)-1+II,J)
  300                        DO 140 M1=1,NSOIL
  301                            ZSOL(M1,J,NI,4)=Z(M1,NNJ-1+XDIFF(J),JJJ)
```

Line# Source Line Microsoft FORTRAN Optimizing Compiler Version 5.00

```
  302   140                    CONTINUE
  303                          XROW=XAPRIN-1+II
  304                          IF (II.EQ.NCORIG(J+1)) THEN
  305                              ZCOL(J,NI,3)=ZCOL(J,NI-1,2)
  306                              DO 150 M1=1,NSOIL
  307                                  ZSOL(M1,J,NI,3)=ZSOL(M1,J,NI-1,2)
  308   150                        CONTINUE
  309                          ELSE
  310                              YTESTE=YCOL(J,NI,3)
  311                              CALL COORYZ (XROW,Y,Z,NY,YTESTE,ZFINAL,ALPHA)
  312                              ZCOL(J,NI,3)=ZFINAL
  313                              DO 160 M1=1,NSOIL
  314                                  ZSOL(M1,J,NI,3)=ZFINAL
  315   160                        CONTINUE
  316                          END IF
  317                          IF (XROW.EQ.NXEND(J)) THEN
  318                              ZCOL(J,NI,2)=ZPOL(NXPOL(J),J)
  319                              DO 170 M1=1,NSOIL
  320                                  ZSOL(M1,J,NI,2)=ZPOL(NXPOL(J),J)
  321   170                        CONTINUE
  322                          ELSE
  323                              YTESTE=YCOL(J,NI,2)
  324                              CALL COORYZ (XROW+1,Y,Z,NY,YTESTE,ZFINAL,
  325       1                       ALPHA)
  326                              ZCOL(J,NI,2)=ZFINAL
  327                              DO 180 M1=1,NSOIL
  328                                  ZSOL(M1,J,NI,2)=ZFINAL
  329   180                        CONTINUE
  330                          END IF
  331                      END IF
  332                      ZCOL(J,NI,1)=ZPOL(NPTLEF(J)+II,J)
  333                      DO 190 M1=1,NSOIL
  334                          ZSOL(M1,J,NI,1)=Z(M1,NNJ+XDIFF(J),JJJ)
  335   190                CONTINUE
  336   200          CONTINUE
  337   C     ---------------------------------------------------------------
  338   C     Here ends the condition J+1 < j
  339   C     ---------------------------------------------------------------
  340             END IF
  341   C     ---------------------------------------------------------------
  342   C     This label 9 ends the process for the right side
  343   C     ---------------------------------------------------------------
  344    210  CONTINUE
  345   C     ---------------------------------------------------------------
  346   C     PART 6 - LAST SERIES OF COLUMNS - RIGHT SIDE
  347   C     ---------------------------------------------------------------
  348         YTES1=YPA2
  349         XTES1=X(XAPRIN)
  350         YTES2=YPOL(NYPOL-1)
  351         XTES2=XPOL(NXPOL(NYPOL-1),NYPOL-1)
  352         A=(YTES1-YTES2)/(XTES1-XTES2)
  353         B=YTES1-A*XTES1
  354   C     ---------------------------------------------------------------
  355   C     number of columns
  356   C     ---------------------------------------------------------------
  357         NCORIG(NYPOL-1)=-(XAPRIN-NXEND(NYPOL-1))+1
  358   C     ---------------------------------------------------------------
  359   C     number of points
```

Line# Source Line Microsoft FORTRAN Optimizing Compiler Version 5.00

```
360  C     ------------------------------------------------------------------
361        NPTRIG(NYPOL-1)=NCORIG(NYPOL-1)+1
362        NPPOL=NYPOL-1
363        NPTLEF(NPPOL)=(XAPRIN-NXSTAR(NPPOL)+2)
364  C     ------------------------------------------------------------------
365  C     transfer coordinates
366  C     ------------------------------------------------------------------
367        DO 270 I=1,NCORIG(NPPOL)
368            NI=I
369            NNJ=NPTLEF(NPPOL)+I
370            JJJ=NYSTAR+NPPOL-2
371            XCOL(NPPOL,NI,1)=XPOL(NPTLEF(NPPOL)+I,NPPOL)
372            XCOL(NPPOL,NI,2)=XPOL(NPTLEF(NPPOL)+I,NPPOL)
373            XCOL(NPPOL,NI,3)=XPOL(NPTLEF(NPPOL)-1+I,NPPOL)
374            XCOL(NPPOL,NI,4)=XPOL(NPTLEF(NPPOL)-1+I,NPPOL)
375            YCOL(NPPOL,NI,1)=YPOL(NPPOL)
376            YCOL(NPPOL,NI,2)=A*XCOL(NPPOL,NI,2)+B
377            YCOL(NPPOL,NI,3)=A*XCOL(NPPOL,NI,3)+B
378            YCOL(NPPOL,NI,4)=YPOL(NPPOL)
379  C     ------------------------------------------------------------------
380  C     define xrow to be used
381  C     ------------------------------------------------------------------
382            ZCOL(NPPOL,NI,4)=ZPOL(NPTLEF(NPPOL)+I-1,NPPOL)
383            DO 220 M1=1,NSOIL
384                ZSOL(M1,NPPOL,NI,4)=Z(M1,NNJ-1+XDIFF(NPPOL),JJJ)
385   220      CONTINUE
386            XROW=XAPRIN+I-1
387            YTESTE=YCOL(NPPOL,NI,3)
388            CALL COORYZ (XROW,Y,Z,NY,YTESTE,ZFINAL,ALPHA)
389            ZCOL(NPPOL,NI,3)=ZFINAL
390            DO 230 M1=1,NSOIL
391                ZSOL(M1,NPPOL,NI,3)=ZFINAL
392   230      CONTINUE
393            IF (XROW.EQ.NXEND(NPPOL)) THEN
394                ZCOL(NPPOL,NI,2)=ZPOL(NXPOL(NPPOL),NPPOL)
395                DO 240 M1=1,NSOIL
396                    ZSOL(M1,NPPOL,NI,2)=ZPOL(NXPOL(NPPOL),NPPOL)
397   240          CONTINUE
398            ELSE
399                YTESTE=YCOL(NPPOL,NI,2)
400                CALL COORYZ (XROW+1,Y,Z,NY,YTESTE,ZFINAL,ALPHA)
401                ZCOL(NPPOL,NI,2)=ZFINAL
402                DO 250 M1=1,NSOIL
403                    ZSOL(M1,NPPOL,NI,2)=ZFINAL
404   250          CONTINUE
405            END IF
406            ZCOL(NPPOL,NI,1)=ZPOL(NPTLEF(NPPOL)+I,NPPOL)
407            DO 260 M1=1,NSOIL
408                ZSOL(M1,NPPOL,NI,1)=Z(M1,NNJ+XDIFF(NPPOL),JJJ)
409   260      CONTINUE
410   270  CONTINUE
411        RETURN
412        END
```

Microsoft FORTRAN Optimizing Compiler Version 5.00

COLUMR Local Symbols

Name	Class	Type	Size	Offset
NSOIL	param			0006
XDIFF	param			000a
ZSOL.	param			000e
NXEND	param			0012
NPTRIG.	param			0016
NPTLEF.	param			001a
NCORIG.	param			001e
NCOLEF.	param			0022
ZCOL.	param			0026
YCOL.	param			002a
XCOL.	param			002e
ZPOL.	param			0032
YPOL.	param			0036
XPOL.	param			003a
NXPOL	param			003e
NXSTAR.	param			0042
XFPOL	param			0046
XAPRIN.	param			004a
Z	param			004e
Y	param			0052
X	param			0056
NPPOL	param			005a
NYPOL	param			005e
NYSTAR.	param			0062
YPA2.	param			0066
YPA1.	param			006a
A	local	REAL*4	4	0000
B	local	REAL*4	4	0004
ZFINAL.	local	REAL*4	4	0008
I	local	INTEGER*4	4	000c
J	local	INTEGER*4	4	0010
JJJ1.	local	INTEGER*4	4	0014
XROW.	local	INTEGER*4	4	0018
II.	local	INTEGER*4	4	001c
NNJ1.	local	INTEGER*4	4	0020
NI.	local	INTEGER*4	4	0024
JJJ	local	INTEGER*4	4	0028
YTESTE.	local	REAL*4	4	002c
NNJ	local	INTEGER*4	4	0030
ALPHA	local	REAL*4	4	0034
NY.	local	INTEGER*4	4	0038
NNN	local	INTEGER*4	4	003c
XTES1	local	REAL*4	4	0040
XTES2	local	REAL*4	4	0044
YTES1	local	REAL*4	4	0048
YTES2	local	REAL*4	4	004c
MI.	local	INTEGER*4	4	0050

Symbolic Constant	Type	Value
MCOORD.	INTEGER*4	25
MSOIL	INTEGER*4	5
NUMCOL.	INTEGER*4	10

Microsoft FORTRAN Optimizing Compiler Version 5.00

Symbolic Constant	Type	Value
NCORN	INTEGER*4	4
MAXSUR.	INTEGER*4	2000

Global Symbols

Name	Class	Type	Size	Offset
COLUMR.	FSUBRT	***	***	0000
COORYZ.	extern	***	***	***

Code size = 2e94 (11924)
Data size = 0000 (0)
Bss size = 0054 (84)

No errors detected

```
^H                                                                    PAGE   1
                                                                   04-12-91
                                                                   12:07:05

Line#  Source Line          Microsoft FORTRAN Optimizing Compiler Version 5.00

     1        SUBROUTINE COORXZ (YFIXED,X,Z,NVERT,XTESTE,ZTESTE)
     2  C                      {--------input---------}{---output---}
     3  $include:'CURRENTF.INC'
      ***** Begin listing of: CURRENTF.INC
     1  *
     2  *========================= Prologue ===================================
     3  *
     4  * Purpose:
     5  *    Include file with parameter declaration for the program PCSTL3D
     6  *
     7  * History:
     8  *    Version         Programmer     Date          Description
     9  *    -------         ----------     ----          -----------
    10  *    1.0             G.Moshkovich                 created
    11  *
    12  * IN args/commons           Units            Description
    13  * ---------------           -----            -----------
    14  *
    15  * OUT args/commons          Units            Description
    16  * ----------------          -----            -----------
    17  *
    18  * INOUT args/commons        Units            Description
    19  * ------------------        -----            -----------
    20  *
    21  * Processing:
    22  *    none
    23  *
    24  * Special Requirements:
    25  *    none
    26  *
    27  *------------------------- Include files -----------------------------
    28  *------------------------- Constant declarations ---------------------
    29        integer MCOORD, MSOIL, NUMCOL, NCORN
    30
    31        parameter (MCOORD = 25, MSOIL = 5)
    32        parameter (NUMCOL = 10, NCORN = 4)
    33        PARAMETER (MAXSUR=2000)
    34
    35  *------- MCOORD - maximum number of points in each direction
    36  *------- MSOIL -  maximum number of soil layers
    37  *------- NUMCOL - maximum number of generated columns
    38  *------- NCORN - number of nods for each column (do not change)
    39
    40  *------------------------- Argument declarations ---------------------
    41  *------------------------- Global/External declarations --------------
    42  *------------------------- Local declarations ------------------------
    43
    44
    45
      ***** End listing of: CURRENTF.INC
     4  C.....this routine calculates the "z" coordinate of a given xteste...
     5  C.....on the surface of the ground.................................
     6  C.....the value of y is fixed and equals yfixed....................
     7        INTEGER YFIXED,YY
     8        REAL X(MCOORD),Z(MSOIL,MCOORD,MCOORD)
     9        YY=YFIXED
    10        DO 10 J=1,NVERT
    11            IF (X(J).GT.YTESTE) THEN
```

```
 Line#  Source Line          Microsoft FORTRAN Optimizing Compiler Version 5.00

    12                 ALPHA=(Z(1,J,YY)-Z(1,J-1,YY))/(X(J)-X(J-1))
    13                 ZTESTE=Z(1,J-1,YY)+ALPHA*(XTESTE-X(J-1))
    14                 RETURN
    15             ELSE
    16                 IF (X(J).EQ.XTESTE) THEN
    17                     ZTESTE=Z(1,J,YY)
    18                     ALPHA=(Z(1,J+1,YY)-Z(1,J,YY))/(X(J+1)-X(J))
    19                     RETURN
    20                 ELSE
    21                 END IF
    22             END IF
    23   10    CONTINUE
    24         END
***** COORXZ.FOR(24) : warning F4998: YTESTE : variable used but not defined


COORXZ  Local Symbols

Name                        Class    Type              Size   Offset

ZTESTE. . . . . . . . . . . param                              0006
XTESTE. . . . . . . . . . . param                              000a
NVERT . . . . . . . . . . . param                              000e
Z . . . . . . . . . . . . . param                              0012
X . . . . . . . . . . . . . param                              0016
YFIXED. . . . . . . . . . . param                              001a
J . . . . . . . . . . . . . local    INTEGER*4            4     0000
YTESTE. . . . . . . . . . . local    REAL*4               4     0004
ALPHA . . . . . . . . . . . local    REAL*4               4     0008
YY. . . . . . . . . . . . . local    INTEGER*4            4     000c

Symbolic Constant             Type                  Value

MCOORD. . . . . . . . . . . INTEGER*4                    25
MSOIL . . . . . . . . . . . INTEGER*4                     5
NUMCOL. . . . . . . . . . . INTEGER*4                    10
NCORN . . . . . . . . . . . INTEGER*4                     4
MAXSUR. . . . . . . . . . . INTEGER*4                  2000


Global Symbols

Name                        Class    Type              Size   Offset

COORXZ. . . . . . . . . . . FSUBRT   ***                ***    0000

Code size = 018d (397)
Data size = 0000 (0)
Bss size  = 0010 (16)

No errors detected
```

```
^H                                                                    PAGE   1
                                                                   04-12-91
                                                                   12:07:11

Line#  Source Line          Microsoft FORTRAN Optimizing Compiler Version 5.00

     1        SUBROUTINE COORYZ (XFIXED,Y,Z,NVERT,YTESTE,ZTESTE,ALPHA)
     2  C                      {--------input---------}{---output---}
     3  $include:'CURRENTF.INC'
      ***** Begin listing of: CURRENTF.INC
     1  *
     2  *======================== Prologue ====================================
     3  *
     4  * Purpose:
     5  *    Include file with parameter declaration for the program PCSTL3D
     6  *
     7  * History:
     8  *    Version          Programmer     Date          Description
     9  *    -------          ----------     ----          -----------
    10  *    1.0              G.Moshkovich                 created
    11  *
    12  * IN args/commons           Units            Description
    13  * ---------------           -----            -----------
    14  *
    15  * OUT args/commons          Units            Description
    16  * ----------------          -----            -----------
    17  *
    18  * INOUT args/commons        Units            Description
    19  * ------------------        -----            -----------
    20  *
    21  * Processing:
    22  *    none
    23  *
    24  * Special Requirements:
    25  *    none
    26  *
    27  *------------------------- Include files -------------------------------
    28  *------------------------- Constant declarations -----------------------
    29        integer MCOORD, MSOIL, NUMCOL, NCORN
    30
    31        parameter (MCOORD = 25, MSOIL = 5)
    32        parameter (NUMCOL = 10, NCORN = 4)
    33        PARAMETER (MAXSUR=2000)
    34
    35  *------- MCOORD - maximum number of points in each direction
    36  *------- MSOIL -  maximum number of soil layers
    37  *------- NUMCOL - maximum number of generated columns
    38  *------- NCORN - number of nods for each column (do not change)
    39
    40  *------------------------- Argument declarations -----------------------
    41  *------------------------- Global/External declarations ----------------
    42  *------------------------- Local declarations --------------------------
    43
    44
    45
      ***** End listing of: CURRENTF.INC
     4  C.....this routine calculates the "z" coordinate of a given yteste...
     5  C.....on the surface of the ground.....................................
     6  C.....the value of x is fixed and equals xfixed.......................
     7        INTEGER XFIXED,XX
     8        REAL Y(MCOORD),Z(MSOIL,MCOORD,MCOORD)
     9        XX=XFIXED
    10        DO 10 J=1,NVERT
    11            IF (Y(J).GT.YTESTE) THEN
```

```
^H                                                                    PAGE    2
                                                                    04-12-91
                                                                    12:07:11

 Line#  Source Line          Microsoft FORTRAN Optimizing Compiler Version 5.00

    12                 ALPHA=(Z(1,XX,J)-Z(1,XX,J-1))/(Y(J)-Y(J-1))
    13                 ZTESTE=Z(1,XX,J-1)+ALPHA*(YTESTE-Y(J-1))
    14                 RETURN
    15             ELSE
    16                 IF (Y(J).EQ.YTESTE) THEN
    17                     ZTESTE=Z(1,XX,J)
    18                     ALPHA=(Z(1,XX,J+1)-Z(1,XX,J))/(Y(J+1)-Y(J))
    19                     RETURN
    20                 ELSE
    21                 END IF
    22             END IF
    23   10   CONTINUE
    24        END


COORYZ  Local Symbols

Name                      Class   Type              Size   Offset

ALPHA . . . . . . . . . . param                            0006
ZTESTE. . . . . . . . . . param                            000a
YTESTE. . . . . . . . . . param                            000e
NVERT . . . . . . . . . . param                            0012
Z . . . . . . . . . . . . param                            0016
Y . . . . . . . . . . . . param                            001a
XFIXED. . . . . . . . . . param                            001e
J . . . . . . . . . . . . local   INTEGER*4          4     0000
XX. . . . . . . . . . . . local   INTEGER*4          4     0004


Symbolic Constant            Type                Value

MCOORD. . . . . . . . . . INTEGER*4                       25
MSOIL . . . . . . . . . . INTEGER*4                        5
NUMCOL. . . . . . . . . . INTEGER*4                       10
NCORN . . . . . . . . . . INTEGER*4                        4
MAXSUR. . . . . . . . . . INTEGER*4                     2000


Global Symbols

Name                      Class   Type              Size   Offset

COORYZ. . . . . . . . . . FSUBRT  ***               ***    0000

Code size = 01c0 (448)
Data size = 0000 (0)
Bss size  = 0008 (8)

No errors detected
```

```
^H                                                                    PAGE   1
                                                                   04-12-91
                                                                   12:07:43

Line#  Source Line          Microsoft FORTRAN Optimizing Compiler Version 5.00

     1        SUBROUTINE CRITIC (NYPOL,NXPOL,XPOL,YPOL,ZPOL,NXSTAR,NXEND,NSURF,
     2       1NSURFA,FS,NX,NY,X,Y,Z,NYSTAR,NYEND)
     3  $include:'CURRENTF.INC'
      ***** Begin listing of: CURRENTF.INC
     1  *
     2  *========================= Prologue ===================================
     3  *
     4  * Purpose:
     5  *    Include file with parameter declaration for the program PCSTL3D
     6  *
     7  * History:
     8  *    Version         Programmer     Date          Description
     9  *    -------         ----------     ----          -----------
    10  *    1.0             G.Moshkovich                 created
    11  *
    12  * IN args/commons           Units            Description
    13  * ---------------           -----            -----------
    14  *
    15  * OUT args/commons          Units            Description
    16  * ----------------          -----            -----------
    17  *
    18  * INOUT args/commons        Units            Description
    19  * ------------------        -----            -----------
    20  *
    21  * Processing:
    22  *    none
    23  *
    24  * Special Requirements:
    25  *    none
    26  *
    27  *------------------------- Include files ------------------------------
    28  *------------------------- Constant declarations ----------------------
    29        integer MCOORD, MSOIL, NUMCOL, NCORN
    30
    31        parameter (MCOORD = 25, MSOIL = 5)
    32        parameter (NUMCOL = 10, NCORN = 4)
    33        PARAMETER (MAXSUR=2000)
    34
    35  *------- MCOORD - maximum number of points in each direction
    36  *------- MSOIL -  maximum number of soil layers
    37  *------- NUMCOL - maximum number of generated columns
    38  *------- NCORN - number of nods for each column (do not change)
    39
    40  *------------------------- Argument declarations ----------------------
    41  *------------------------- Global/External declarations ---------------
    42  *------------------------- Local declarations -------------------------
    43
    44
    45
      ***** End listing of: CURRENTF.INC
     4        DIMENSION NXPOL1(NUMCOL,MCOORD), NYPOL1(NUMCOL), XPOL1(NUMCOL,
     5       1MCOORD,MCOORD), YPOL1(NUMCOL,MCOORD), ZPOL1(NUMCOL,MCOORD,MCOORD)
     6       2 NXSTA1(NUMCOL,MCOORD), NXEND1(NUMCOL,MCOORD), NXPOL(MCOORD),
     7       3NXSTAR(MCOORD), NXEND(MCOORD), XPOL(MCOORD,MCOORD), YPOL(MCOORD),
     8       4ZPOL(MCOORD,MCOORD), FS1(NUMCOL), X(MCOORD), Y(MCOORD), Z(MSOIL,
     9       5MCOORD,MCOORD), NYSTA1(NUMCOL), NYEND1(NUMCOL)
    10        CHARACTER NAMCRI*12
    11        INTEGER*4 DIMEN1,DIMEN2
```

Line# Source Line Microsoft FORTRAN Optimizing Compiler Version 5.00

```
      PARAMETER (DIMEN1=NUMCOL*MCOORD,DIMEN2=NUMCOL*MCOORD*MCOORD)
      DATA (NYPOL1(I),I=1,NUMCOL)/NUMCOL*1/
      DATA ((NXPOL1(I,J),I=1,NUMCOL),J=1,MCOORD)/DIMEN1*1/
      DATA (((XPOL1(I,J,K),I=1,NUMCOL),J=1,MCOORD),K=1,MCOORD)/DIMEN2*0
     10/
      DATA ((YPOL1(I,J),I=1,NUMCOL),J=1,MCOORD)/DIMEN1*0.0/
      DATA (((ZPOL1(I,J,K),I=1,NUMCOL),J=1,MCOORD),K=1,MCOORD)/DIMEN2*0
     10/
      DATA ((NXSTA1(I,J),I=1,NUMCOL),J=1,MCOORD)/DIMEN1*1/
      DATA ((NXEND1(I,J),I=1,NUMCOL),J=1,MCOORD)/DIMEN1*1/
      DATA (FS1(I),I=1,NUMCOL)/NUMCOL*1000000.0/
      DATA (NYSTA1(I),I=1,NUMCOL)/NUMCOL*1000000.0/
      DATA (NYEND1(I),I=1,NUMCOL)/NUMCOL*1000000.0/
      DO 80 I=1,NUMCOL
          IF ((FS.LE.FS1(I)).AND.(FS.GT.0)) THEN
              DO 40 J=NUMCOL,I+1,-1
                  FS1(J)=FS1(J-1)
                  NYPOL1(J)=NYPOL1(J-1)
                  NYSTA1(J)=NYSTA1(J-1)
                  NYEND1(J)=NYEND1(J-1)
                  DO 10 J1=1,NYPOL1(J-1)
                      NXPOL1(J,J1)=NXPOL1(J-1,J1)
                      YPOL1(J,J1)=YPOL1(J-1,J1)
                      NXSTA1(J,J1)=NXSTA1(J-1,J1)
                      NXEND1(J,J1)=NXEND1(J-1,J1)
   10             CONTINUE
                  DO 30 J2=1,NYPOL1(J-1)
                      DO 20 J1=1,NXPOL1(J-1,J2)
                          XPOL1(J,J1,J2)=XPOL1(J-1,J1,J2)
                          ZPOL1(J,J1,J2)=ZPOL1(J-1,J1,J2)
   20                 CONTINUE
   30             CONTINUE
   40         CONTINUE
              FS1(I)=FS
              NYPOL1(I)=NYPOL
              NYSTA1(I)=NYSTAR
              NYEND1(I)=NYEND
              DO 50 J1=1,NYPOL
                  NXPOL1(I,J1)=NXPOL(J1)
                  YPOL1(I,J1)=YPOL(J1)
                  NXSTA1(I,J1)=NXSTAR(J1)
                  NXEND1(I,J1)=NXEND(J1)
   50         CONTINUE
              DO 70 J2=1,NYPOL
                  DO 60 J1=1,NXPOL(J2)
                      XPOL1(I,J1,J2)=XPOL(J1,J2)
                      ZPOL1(I,J1,J2)=ZPOL(J1,J2)
   60             CONTINUE
   70         CONTINUE
C     ---exit loop---
              GO TO 90
          END IF
   80   CONTINUE
   90   CONTINUE
C         write(*,*) ' '
C       do 3 i=1,NUMCOL
C         write(*,*) '  fs(',i,') =  ',fs1(i)
C    3  continue
```

Line# Source Line Microsoft FORTRAN Optimizing Compiler Version 5.00

```
    70         IF (NSURF.EQ.NSURFA) THEN
    71   C     ------------------------------------------------------------
    72   C     PRINT DATA OF 10 MOST CRITICAL SURFACES
    73   C     ------------------------------------------------------------
    74             WRITE (2,190)
    75             DO 120 I=1,10
    76                 WRITE (2,200) I
    77                 WRITE (2,210)
    78                 DO 110 J=1,NYPOL1(I)
    79                     DO 100 J1=1,NXPOL1(I,J)
    80                         WRITE (2,220) XPOL1(I,J1,J),YPOL1(I,J),ZPOL1(I,J1
    81        1                 J)
    82     100                 CONTINUE
    83     110                 CONTINUE
    84                 WRITE (2,230) FS1(I)
    85     120         CONTINUE
    86   C     ------------------------------------------------------------
    87   C     STORE DATA OF 2 MOST CRITICAL SURFACE TO PLOT
    88   C     ------------------------------------------------------------
    89             WRITE (*,*) 'Please the most critical surface file name: '
    90             READ (*,'(a)') NAMCRI
    91             OPEN (3,FILE=NAMCRI)
    92   C       open(4,file='plot10.dat')
    93   C       open(5,file='aver.dat')
    94   C.......for i= polygonal  1  (file for contour plot)
    95             I=1
    96             WRITE (3,*) 'PCSTBL3D v2.0 Critical Surface'
    97             WRITE (3,*) NX,NY
    98             DO 130 NNY=1,NYSTA1(I)-1
    99                 DO 130 NNX=1,NX
   100                 WRITE (3,240) X(NNX),Y(NNY),Z(1,NNX,NNY)
   101     130     CONTINUE
   102             DO 170 NNY=2,NYPOL1(I)-1
   103                 DO 140 NNX=1,NXSTA1(I,NNY)-1
   104                     NYC=NYSTA1(I)+NNY-2
   105                     WRITE (3,240) X(NNX),Y(NYC),Z(1,NNX,NYC)
   106     140         CONTINUE
   107                 DO 150 J1=2,NXPOL1(I,NNY)-1
   108                     WRITE (3,240) XPOL1(I,J1,NNY),YPOL1(I,NNY),ZPOL1(I,J1
   109        1             NNY)
   110     150         CONTINUE
   111                 DO 160 NNX=NXEND1(I,NNY)+1,NX
   112                     NYC=NYSTA1(I)+NNY-2
   113                     WRITE (3,240) X(NNX),Y(NYC),Z(1,NNX,NYC)
   114     160         CONTINUE
   115     170     CONTINUE
   116             DO 180 NNY=NYEND1(I)+1,NY
   117                 DO 180 NNX=1,NX
   118                 WRITE (3,240) X(NNX),Y(NNY),Z(1,NNX,NNY)
   119     180     CONTINUE
   120         END IF
   121         RETURN
   122   C
   123     190   FORMAT (///,7X,'TEN MOST CRITICAL SURFACES : ')
   124     200   FORMAT (//,7X,'SURFACE # ',I2)
   125     210   FORMAT (/,7X,'Coordinate   X',7X,'Coordinate   Y',7X,'Coordinate
   126        1 Z',/)
   127     220   FORMAT (9X,F8.3,13X,F8.3,13X,F8.3)
```

^H

Line# Source Line Microsoft FORTRAN Optimizing Compiler Version 5.00

```
  128   230  FORMAT (/,7X,'Factor of Safety = ',F6.3)
  129   240  FORMAT (1X,F8.3,1X,F8.3,1X,F8.3)
  130        END
```

CRITIC Local Symbols

Name	Class	Type	Size	Offset
NYEND	param			0006
NYSTAR	param			000a
Z	param			000e
Y	param			0012
X	param			0016
NY	param			001a
NX	param			001e
FS	param			0022
NSURFA	param			0026
NSURF	param			002a
NXEND	param			002e
NXSTAR	param			0032
ZPOL	param			0036
YPOL	param			003a
XPOL	param			003e
NXPOL	param			0042
NYPOL	param			0046
I	local	INTEGER*4	4	0002
J	local	INTEGER*4	4	0006
K	local	INTEGER*4	4	000a
NYC	local	INTEGER*4	4	000e
NNX	local	INTEGER*4	4	0012
NNY	local	INTEGER*4	4	0016
NAMCRI	local	CHAR*12	12	001a
J1	local	INTEGER*4	4	0026
J2	local	INTEGER*4	4	002a
NYPOL1	local	INTEGER*4	40	004a
NXPOL1	local	INTEGER*4	1000	0072
XPOL1	local	REAL*4	25000	045a
YPOL1	local	REAL*4	1000	6602
ZPOL1	local	REAL*4	25000	69ea
NXSTA1	local	INTEGER*4	1000	cb92
NXEND1	local	INTEGER*4	1000	cf7a
FS1	local	REAL*4	40	d362
NYSTA1	local	INTEGER*4	40	d38a
NYEND1	local	INTEGER*4	40	d3b2

Symbolic Constant	Type	Value
MCOORD	INTEGER*4	25
MSOIL	INTEGER*4	5
NUMCOL	INTEGER*4	10
NCORN	INTEGER*4	4
MAXSUR	INTEGER*4	2000
DIMEN1	INTEGER*4	250
DIMEN2	INTEGER*4	6250

^H

Microsoft FORTRAN Optimizing Compiler Version 5.00

Global Symbols

Name	Class	Type	Size	Offset
CRITIC.	FSUBRT	***	***	0000

Code size = 0b92 (2962)
Data size = d473 (54387)
Bss size = 002e (46)

No errors detected

```
^H                                                                    PAGE   1
                                                                    04-12-91
                                                                    12:07:55

Line#  Source Line          Microsoft FORTRAN Optimizing Compiler Version 5.00

       SUBROUTINE FSCALC (COES,FI,A3,W3,U3,DIP,ALPHAYZ,FS,NYPOL,NCOLEF,
      1NCORIG)
$include:'CURRENTF.INC'
***** Begin listing of: CURRENTF.INC
*
*========================= Prologue ====================================
*
* Purpose:
*    Include file with parameter declaration for the program PCSTL3D
*
* History:
*    Version          Programmer     Date          Description
*    -------          ----------     ----          -----------
*    1.0              G.Moshkovich                 created
*
* IN args/commons            Units            Description
* ---------------            -----            -----------
*
* OUT args/commons           Units            Description
* ----------------           -----            -----------
*
* INOUT args/commons         Units            Description
* ------------------         -----            -----------
*
* Processing:
*    none
*
* Special Requirements:
*    none
*
*------------------------- Include files ------------------------------
*------------------------- Constant declarations ----------------------
      integer MCOORD, MSOIL, NUMCOL, NCORN

      parameter (MCOORD = 25, MSOIL = 5)
      parameter (NUMCOL = 10, NCORN = 4)
      PARAMETER (MAXSUR=2000)

*------- MCOORD - maximum number of points in each direction
*------- MSOIL -  maximum number of soil layers
*------- NUMCOL - maximum number of generated columns
*------- NCORN - number of nods for each column (do not change)

*------------------------- Argument declarations ----------------------
*------------------------- Global/External declarations ---------------
*------------------------- Local declarations -------------------------



***** End listing of: CURRENTF.INC
      DIMENSION COES(MSOIL), FI(MSOIL), ALPHAYZ(MCOORD,-NUMCOL:NUMCOL),
     1DIP(MCOORD,-NUMCOL:NUMCOL), A3(MCOORD,-NUMCOL:NUMCOL), W3(MCOORD,
     2NUMCOL:NUMCOL), U3(MCOORD,-NUMCOL:NUMCOL), NCOLEF(MCOORD),
     3NCORIG(MCOORD)
      XNUMER=0.
      DENOM=0.
      DO 20 I=1,NYPOL-1
          NNI=-NCOLEF(I)
```

Line# Source Line Microsoft FORTRAN Optimizing Compiler Version 5.00

```
    12            NNF=NCORIG(I)
    13            DO 10 J=NNI,NNF
    14                IF (J.EQ.0) GO TO 10
    15                EFFECT=(W3(I,J)*COS(DIP(I,J))-U3(I,J))
    16                IF (EFFECT.LT.0.0) EFFECT=0.0
    17                XNUMER=XNUMER+COES(1)*A3(I,J)+(EFFECT)*TAN(FI(1))
    18                DENOM=DENOM+W3(I,J)*SIN(ALPHAYZ(I,J))
    19     10         CONTINUE
    20     20     CONTINUE
    21     C      --------------- Factor of safety ------------------------------
    22            FS1=XNUMER/DENOM
    23     C      --------------- Modified Factor of Safety --------------------
    24            FS=FS1
    25     C        if (fs1 .gt. 0) then
    26     C            write (*,*) ' FS 3D = ', fs1
    27     C        endif
    28            ITER=1
    29     30     XNUMER=0.
    30            DENOM=0.
    31            DO 50 I=1,NYPOL-1
    32                NNI=-NCOLEF(I)
    33                NNF=NCORIG(I)
    34                DO 40 J=NNI,NNF
    35                    IF (J.NE.0) THEN
    36                        PES1=(W3(I,J)/COS(DIP(I,J)))-U3(I,J)*A3(I,J)
    37     C               if (pes1 .lt. 0.0) pes1 = 0.0
    38                        XITEM1=(PES1*TAN(FI(1))+COES(1)*A3(I,J))
    39                        XITEM2=XITEM1*(COS(ALPHAYZ(I,J))+SIN(ALPHAYZ(I,J))*
    40           1             TAN(DIP(I,J)))
    41                        XITEM3=TAN(FI(1))*SIN(ALPHAYZ(I,J))/(FS*COS(DIP(I,J))
    42                        XITEM4=(1.+XITEM3)
    43                        XNUMER=XNUMER+XITEM2/XITEM4
    44                        DENOM=DENOM+W3(I,J)*TAN(DIP(I,J))
    45                    END IF
    46     40         CONTINUE
    47     50     CONTINUE
    48            FS2=XNUMER/DENOM
    49            IF (ABS(FS2-FS).LT.0.01) THEN
    50     C           write(*,*) ' FS iteractive = ',fs2
    51                FS=FS2
    52            END IF
    53            IF ((ABS(FS2-FS).GE.0.01).AND.(ITER.LT.11)) THEN
    54                FS=(FS2+FS)/2
    55                ITER=ITER+1
    56                GO TO 30
    57            END IF
    58            IF ((ITER.GE.11).AND.(ABS(FS2-FS).GE.0.01)) THEN
    59     C            if (fs2.gt.0) write(*,*) 'FS did not converge..'
    60     C            write(*,*) ' '
    61     C            write(*,*) ' '
    62                FS=FS1
    63            END IF
    64            RETURN
    65            END
```

Microsoft FORTRAN Optimizing Compiler Version 5.00

FSCALC Local Symbols

Name	Class	Type	Size	Offset
NCORIG.	param			0006
NCOLEF.	param			000a
NYPOL	param			000e
FS.	param			0012
ALPHAYZ	param			0016
DIP	param			001a
U3.	param			001e
W3.	param			0022
A3.	param			0026
FI.	param			002a
COES.	param			002e
I	local	INTEGER*4	4	0000
FS1	local	REAL*4	4	0004
J	local	INTEGER*4	4	0008
FS2	local	REAL*4	4	000c
PES1.	local	REAL*4	4	0010
XNUMER.	local	REAL*4	4	0014
NNF	local	INTEGER*4	4	0018
NNI	local	INTEGER*4	4	001c
EFFECT.	local	REAL*4	4	0020
DENOM	local	REAL*4	4	0024
ITER.	local	INTEGER*4	4	0028
XITEM1.	local	REAL*4	4	002c
XITEM2.	local	REAL*4	4	0030
XITEM3.	local	REAL*4	4	0034
XITEM4.	local	REAL*4	4	0038

Symbolic Constant	Type	Value
MCOORD.	INTEGER*4	25
MSOIL	INTEGER*4	5
NUMCOL.	INTEGER*4	10
NCORN	INTEGER*4	4
MAXSUR.	INTEGER*4	2000

Global Symbols

Name	Class	Type	Size	Offset
FSCALC.	FSUBRT	***	***	0000

Code size = 0606 (1542)
Data size = 0010 (16)
Bss size = 003c (60)

No errors detected

```
^H                                                                    PAGE   1
                                                                   04-12-91
                                                                   12:08:21

Line#  Source Line          Microsoft FORTRAN Optimizing Compiler Version 5.00

     1  $notruncate
     2  $title:'PCSTBL3D v2.0'
     3  $subtitle:'Input Data'
     4  $large
     5        SUBROUTINE INDATA (NX,NY,NSOIL,X,Y,Z,XAPRIN,YMIN1,DYMIN1,YMIN2,
     6       1DYMIN2,XMIN1,DXMIN1,XMIN2,DXMIN2,ZMIN,DZMIN,GAMA,COES,FI,UCOND,RU
     7       2UZ,DATOUT)
     8  *
     9  *======================== Prologue ====================================
    10  *
    11  * Purpose:
    12  *    Input data routine for the program PCSTBL3D
    13  *
    14  * History:
    15  *    Version         Programmer     Date          Description
    16  *    -------         ----------     ----          -----------
    17  *    1.0             J.E.Thomas                   created
    18  *    2.0             G.Moshkovich                 code beautified,
    19  *                                                 variables declared
    20  *
    21  * IN args/commons           Units            Description
    22  * ---------------           -----            -----------
    23  *
    24  * OUT args/commons          Units            Description
    25  * ----------------          -----            -----------
    26  * nx
    27  * ny
    28  * nsoil
    29  * x
    30  * y
    31  * z
    32  * xaprin
    33  * ymin1
    34  * dymin1
    35  * ymin2
    36  * dymin2
    37  * xmin1
    38  * dxmin1
    39  * xmin2
    40  * dxmin2
    41  * zmin
    42  * dzmin
    43  * gama
    44  * coes
    45  * fi
    46  * ucond
    47  * ru
    48  * uz
    49  * dataout
    50  *
    51  * INOUT args/commons        Units            Description
    52  * ------------------        -----            -----------
    53  *
    54  * Processing:
    55  *     Open data file, check if the file is valid PCSTBL3D data file,
    56  * read geometry and soil data from the file, prints all data in the
    57  * output file defined by the user.
    58  *
```

```
 Line#  Source Line          Microsoft FORTRAN Optimizing Compiler Version 5.00

    59  * Special Requirements:
    60  *    none
    61  *
    62  *------------------------- Include files -----------------------------
    63  $include:'CURRENTF.INC'
      ***** Begin listing of: CURRENTF.INC
     1  *
     2  *========================= Prologue ====================================
     3  *
     4  * Purpose:
     5  *    Include file with parameter declaration for the program PCSTL3D
     6  *
     7  * History:
     8  *    Version          Programmer     Date          Description
     9  *    -------          ----------     ----          -----------
    10  *    1.0              G.Moshkovich                 created
    11  *
    12  * IN args/commons           Units            Description
    13  * ---------------           -----            -----------
    14  *
    15  * OUT args/commons          Units            Description
    16  * ----------------          -----            -----------
    17  *
    18  * INOUT args/commons        Units            Description
    19  * ------------------        -----            -----------
    20  *
    21  * Processing:
    22  *    none
    23  *
    24  * Special Requirements:
    25  *    none
    26  *
    27  *------------------------- Include files -----------------------------
    28  *------------------------- Constant declarations ---------------------
    29        integer MCOORD, MSOIL, NUMCOL, NCORN
    30
    31        parameter (MCOORD = 25, MSOIL = 5)
    32        parameter (NUMCOL = 10, NCORN = 4)
    33        PARAMETER (MAXSUR=2000)
    34
    35  *------- MCOORD - maximum number of points in each direction
    36  *------- MSOIL -  maximum number of soil layers
    37  *------- NUMCOL - maximum number of generated columns
    38  *------- NCORN - number of nods for each column (do not change)
    39
    40  *------------------------- Argument declarations ---------------------
    41  *------------------------- Global/External declarations --------------
    42  *------------------------- Local declarations ------------------------
    43
    44
    45
      ***** End listing of: CURRENTF.INC
    64  *------------------------- Constant declarations ---------------------
    65  *------------------------- Argument declarations ---------------------
    66        REAL X(MCOORD),Y(MCOORD),XMIN1(MCOORD),DXMIN1(MCOORD),
    67       1DXMIN2(MCOORD),XMIN2(MCOORD)
    68        REAL Z(MSOIL,MCOORD,MCOORD),UZ(MSOIL,MCOORD,MCOORD)
    69        REAL ZMIN(MCOORD,MCOORD),DZMIN(MCOORD,MCOORD)
```

Line# Source Line Microsoft FORTRAN Optimizing Compiler Version 5.00

```
      REAL COES(MSOIL),GAMA(MSOIL),FI(MSOIL),RU(MSOIL)
      INTEGER NX,NY,NSOIL
      INTEGER UCOND(MSOIL)
      CHARACTER*12 DATOUT
*------------------------ Global/External declarations ---------------
*------------------------- Local declarations -------------------------
      CHARACTER*12 DATIN
      CHARACTER*20 TEST,LEGAL
      INTEGER XAPRIN,I,J,K
*------------------------- Code ---------------------------------------
*.....define input & output files.....................................
      TEST='PCSTBL3D Version 2.0'
 10   WRITE (*,50) ' Enter name of input file : '
      READ (*,'(a)') DATIN
      OPEN (1,FILE=DATIN)
      READ (1,60) LEGAL
      IF (LEGAL.NE.TEST) THEN
          WRITE (*,50) ' Invalid data file, please reenter '
          GO TO 10
      END IF
      WRITE (*,50) ' Enter name of output file : '
      READ (*,'(a)') DATOUT
      OPEN (2,FILE=DATOUT)
*.....start reading data..............................................
      WRITE (2,70)
      READ (1,*) NX,NY
      WRITE (2,80) NX,NY
      READ (1,*) NSOIL
      WRITE (2,90) NSOIL
      READ (1,*) (X(I),I=1,NX)
      READ (1,*) (Y(J),J=1,NY)
      WRITE (2,100) (I,X(I),I=1,NX)
      WRITE (2,110) (J,Y(J),J=1,NY)
      READ (1,*) (((Z(K,I,J),J=1,NY),I=1,NX),K=1,NSOIL)
      DO 20 K=1,NSOIL
          WRITE (2,120) K
          WRITE (2,130) ((I,J,Z(K,I,J),J=1,NY),I=1,NX)
 20   CONTINUE
      WRITE (2,140)
      READ (1,*) XAPRIN
      WRITE (2,150) X(XAPRIN)
      READ (1,*) YMIN1,DYMIN1,YMIN2,DYMIN2
      WRITE (2,160) YMIN1,DYMIN1,YMIN2,DYMIN2
      WRITE (2,170)
      READ (1,*) (XMIN1(J),DXMIN1(J),XMIN2(J),DXMIN2(J),J=1,NY)
      WRITE (2,180) (Y(J),XMIN1(J),DXMIN1(J),XMIN2(J),DXMIN2(J),J=1,NY)
      WRITE (2,190)
      READ (1,*) ((ZMIN(I,J),DZMIN(I,J),J=1,NY),I=1,NX)
      WRITE (2,200) ((I,J,ZMIN(I,J),I,J,DZMIN(I,J),J=1,NY),I=1,NX)
      WRITE (2,210)
      READ (1,*) (GAMA(K),COES(K),FI(K),K=1,NSOIL)
      WRITE (2,220) (K,GAMA(K),COES(K),FI(K),K=1,NSOIL)
*-------- convert shear angle to radians
      DO 30 K=1,NSOIL
          FI(K)=FI(K)*0.01745329
 30   CONTINUE
      DO 40 K=1,NSOIL
          READ (1,230) UCOND(K)
```

```
 Line#  Source Line          Microsoft FORTRAN Optimizing Compiler Version 5.00

   128            IF (UCOND(K).EQ.1) THEN
   129                READ (1,*) RU(K)
   130                WRITE (2,240) K,RU(K)
   131            ELSE
   132                READ (1,*) ((UZ(K,I,J),J=1,NY),I=1,NX)
   133                WRITE (2,250) ((I,J,UZ(K,I,J),J=1,NY),I=1,NX)
   134            END IF
   135    40    CONTINUE
   136          RETURN
   137   C
   138   C
   139    50    FORMAT (A)
   140    60    FORMAT (20A)
   141    70    FORMAT (1X,'*********************************************'/'*
   142         1             PC-STABL3D                  *'/'*    3-DIMENSIOANL SL
   143         2PE STABILITY PROGRAM   *'/'*           FROM PURDUE UNIVERSITY
   144         3      *'/'*                  VERSION 2.1                  *'/'******
   145         4************************************'/)
   146    80    FORMAT (7X,'Number of X coordinates : ',I3,/,7X,'Number of Y coor
   147         1linates : ',I3)
   148    90    FORMAT (7X,'Number of soils : ',I3,/)
   149    100   FORMAT (//,7X,'X COORDINATES :',/,(7X,'coordinate X(',I3,') = ',
   150         1F7.2))
   151    110   FORMAT (//,7X,'Y COORDINATES :',/,(7X,'coordinate Y(',I3,') = ',
   152         1F7.2,))
   153    120   FORMAT (/,7X,'COORDINATES Z FOR SOIL # ',I2,/)
   154    130   FORMAT (7X,'Z (',I2,',',I2,') = ',F7.2,4X,'Z (',I2,',',I2,') = ',
   155         1F7.2,4X,'Z (',I2,',',I2,') = ',F7.2)
   156    140   FORMAT (/,7X,'BOUNDARIES FOR GENERATION IN THE Y DIRECTION :',//)
   157    150   FORMAT (7X,'Main Axis of Sliding was stablished at X = ',F7.2,/)
   158    160   FORMAT (7X,'Minimum point for initiation of polygonals at Y = ',
   159         1F7.2,/,7X,'Interval for initiation of polygonals is = ',F7.2,/,7X
   160         2'Minimum point for termination of polygonals at Y = ',F7.2,/,7X,'
   161         3nterval for termination of polygonals is = ',F7.2,/)
   162    170   FORMAT (/,7X,'BOUNDARIES FOR GENERATION IN THE X DIRECTION :',/)
   163    180   FORMAT (/,7X,'Coordinate Y = ',F7.2,/,7X,'Minimum point for initi
   164         1tion of polygonals at X = ',F7.2,/,7X,'Interval for initiation of
   165         2polygonals is = ',F7.2,/,7X,'Minimum point for termination of pol
   166         3gonals at X = ',F7.2,/,7X,'Interval for termination of polygonals
   167         4is = ',F7.2,/)
   168    190   FORMAT (/,7X,'BOUNDARIES FOR GENERATION IN THE Z DIRECTION :',/)
   169    200   FORMAT (7X,'Zmin(',I2,',',I2,') = ',F7.2,4X,'Delta Z(',I2,',',I2,
   170         1) = ',F7.2)
   171    210   FORMAT (/,7X,'SOIL PROPERTIES :',//,7X,'Soil',5X,'Unit Weight',5X
   172         1'Cohesion',5X,'Shear Angle',/)
   173    220   FORMAT (/,8X,I2,8X,F6.2,8X,F7.1,9X,F4.1)
   174    230   FORMAT (I3)
   175    240   FORMAT (/,7X,'Ru of soil #',I3,' = ',F4.2)
   176    250   FORMAT (//,'PIEZOMETRIC LINE OF SOIL ',(/,7X,'For x(',I2,') and y
   177         1',I2,'), U = ',F4.2))
   178          END


INDATA  Local Symbols

Name                          Class   Type              Size   Offset

DATOUT. . . . . . . . . . . . param                             0006
```

Microsoft FORTRAN Optimizing Compiler Version 5.00

INDATA Local Symbols

Name	Class	Type	Size	Offset
UZ.	param			000a
RU.	param			000e
UCOND	param			0012
FI.	param			0016
COES.	param			001a
GAMA.	param			001e
DZMIN	param			0022
ZMIN.	param			0026
DXMIN2.	param			002a
XMIN2	param			002e
DXMIN1.	param			0032
XMIN1	param			0036
DYMIN2.	param			003a
YMIN2	param			003e
DYMIN1.	param			0042
YMIN1	param			0046
XAPRIN.	param			004a
Z	param			004e
Y	param			0052
X	param			0056
NSOIL	param			005a
NY.	param			005e
NX.	param			0062
TEST.	local	CHAR*20	20	0012
I	local	INTEGER*4	4	0026
J	local	INTEGER*4	4	002a
K	local	INTEGER*4	4	002e
LEGAL	local	CHAR*20	20	0032
DATIN	local	CHAR*12	12	0046

Symbolic Constant	Type	Value
MCOORD.	INTEGER*4	25
MSOIL	INTEGER*4	5
NUMCOL.	INTEGER*4	10
NCORN	INTEGER*4	4
MAXSUR.	INTEGER*4	2000

Global Symbols

Name	Class	Type	Size	Offset
INDATA.	FSUBRT	***	***	0000

Code size = 1054 (4180)
Data size = 01ed (493)
Bss size = 0052 (82)

No errors detected

```
^H                                                                    PAGE   1
                                                                   04-12-91
                                                                   12:08:29

Line#  Source Line          Microsoft FORTRAN Optimizing Compiler Version 5.00

     1        SUBROUTINE PARAM1 (NYPOL,XCOL,YCOL,ZCOL,ZSOL,NCOLEF,NCORIG,
     2       1ALPHAXZ,ALPHAYZ,DIP,TETA,A3,GAMA,RU,W3,U3,NSOIL)
     3   $include:'CURRENTF.INC'
      ***** Begin listing of: CURRENTF.INC
     1    *
     2    *======================== Prologue ====================================
     3    *
     4    * Purpose:
     5    *    Include file with parameter declaration for the program PCSTL3D
     6    *
     7    * History:
     8    *    Version         Programmer     Date          Description
     9    *    -------         ----------     ----          -----------
    10    *    1.0             G.Moshkovich                 created
    11    *
    12    * IN args/commons           Units            Description
    13    * ---------------           -----            -----------
    14    *
    15    * OUT args/commons          Units            Description
    16    * ----------------          -----            -----------
    17    *
    18    * INOUT args/commons        Units            Description
    19    * ------------------        -----            -----------
    20    *
    21    * Processing:
    22    *    none
    23    *
    24    * Special Requirements:
    25    *    none
    26    *
    27    *------------------------- Include files -------------------------------
    28    *------------------------- Constant declarations ----------------------
    29          integer MCOORD, MSOIL, NUMCOL, NCORN
    30
    31          parameter (MCOORD = 25, MSOIL = 5)
    32          parameter (NUMCOL = 10, NCORN = 4)
    33          PARAMETER (MAXSUR=2000)
    34
    35    *------- MCOORD - maximum number of points in each direction
    36    *------- MSOIL -  maximum number of soil layers
    37    *------- NUMCOL - maximum number of generated columns
    38    *------- NCORN - number of nods for each column (do not change)
    39
    40    *------------------------- Argument declarations ----------------------
    41    *------------------------- Global/External declarations ---------------
    42    *------------------------- Local declarations -------------------------
    43
    44
    45
      ***** End listing of: CURRENTF.INC
     4          DIMENSION XCOL(MCOORD,-NUMCOL:NUMCOL,NCORN), YCOL(MCOORD,-
     5         1NUMCOL:NUMCOL,NCORN), ZCOL(MCOORD,-NUMCOL:NUMCOL,NCORN),
     6         2NCOLEF(MCOORD), NCORIG(MCOORD), ALPHAXZ(MCOORD,-NUMCOL:NUMCOL),
     7         3ALPHAYZ(MCOORD,-NUMCOL:NUMCOL), DIP(MCOORD,-NUMCOL:NUMCOL),
     8         4TETA(MCOORD,-NUMCOL:NUMCOL), A3(MCOORD,-NUMCOL:NUMCOL),
     9         5ZSOL(MSOIL,MCOORD,-NUMCOL:NUMCOL,NCORN), W3(MCOORD,-NUMCOL:NUMCOL
    10         6, U3(MCOORD,-NUMCOL:NUMCOL), GAMA(MSOIL), RU(MSOIL)
    11    C     ---------------------------------------------------------------
```

^H

Line# Source Line Microsoft FORTRAN Optimizing Compiler Version 5.00

```
    12  C     Calculation of column parameters
    13  C     ------------------------------------------------------------
    14        DO 30 I=1,NYPOL-1
    15            NNI=-NCOLEF(I)
    16            NNF=NCORIG(I)
    17            DO 20 J=NNI,NNF
    18                IF (J.EQ.0) GO TO 20
    19                DELTAZ1=(ZCOL(I,J,1)+ZCOL(I,J,2)-(ZCOL(I,J,3)+ZCOL(I,J,4)
    20       1         )/2.
    21                DELTAX1=XCOL(I,J,1)-XCOL(I,J,4)
    22  C     ---- alphaxz(i,j)  -----
    23                ALPHAXZ(I,J)=ATAN(DELTAZ1/DELTAX1)
    24                DELTAZ2=(ZCOL(I,J,2)+ZCOL(I,J,3)-(ZCOL(I,J,1)+ZCOL(I,J,4)
    25       1         )/2.
    26                DELTAY2=(YCOL(I,J,2)+YCOL(I,J,3)-(YCOL(I,J,1)+YCOL(I,J,4)
    27       1         )/2.
    28  C     ---- alphayz(i,j)  -----
    29                ALPHAYZ(I,J)=ATAN(DELTAZ2/DELTAY2)
    30  C     ---- DIP(i,j)  -----
    31                DIP(I,J)=ACOS(1./SQRT(1+(TAN(ALPHAYZ(I,J)))**2+
    32       1         (TAN(ALPHAXZ(I,J)))**2))
    33  C     ---- teta(i,j) and  Area A3(i,j) -----
    34                TETA(I,J)=SQRT(1.-((SIN(ALPHAXZ(I,J))**2)*(SIN(ALPHAYZ(I,
    35       1         J))**2)))
    36                A3(I,J)=(DELTAX1*DELTAY2*TETA(I,J))/(COS(ALPHAXZ(I,J))*
    37       1         COS(ALPHAYZ(I,J)))
    38  C     ---- W3(i,j) = weight of the column ----
    39                W3(I,J)=0.0
    40                ZZCOL=ZCOL(I,J,1)+ZCOL(I,J,2)+ZCOL(I,J,3)+ZCOL(I,J,4)
    41                ZZCOL=ZZCOL/4.
    42                IUCODE=0
    43                DO 10 K=NSOIL,1,-1
    44                    ZZ1=ZSOL(K,I,J,1)+ZSOL(K,I,J,2)+ZSOL(K,I,J,3)+ZSOL(K,
    45       1             I,J,4)
    46                    ZZ1=ZZ1/4.
    47                    IF (ZZ1.GT.ZZCOL) THEN
    48                        W3(I,J)=W3(I,J)+(ZZ1-ZZCOL)*GAMA(K)
    49                        ZZCOL=ZZ1
    50                        IF (IUCODE.EQ.0) THEN
    51                            IUCODE=K
    52                        END IF
    53                    END IF
    54   10           CONTINUE
    55                U3(I,J)=W3(I,J)*RU(IUCODE)
    56                W3(I,J)=W3(I,J)*DELTAX1*DELTAY2
    57   20       CONTINUE
    58   30   CONTINUE
    59        RETURN
    60        END
```

PARAM1 Local Symbols

Name	Class	Type	Size	Offset
NSOIL	param			0006
U3.	param			000a
W3.	param			000e

PARAM1 Local Symbols

Name	Class	Type	Size	Offset
RU.	param			0012
GAMA.	param			0016
A3.	param			001a
TETA.	param			001e
DIP	param			0022
ALPHAYZ	param			0026
ALPHAXZ	param			002a
NCORIG.	param			002e
NCOLEF.	param			0032
ZSOL.	param			0036
ZCOL.	param			003a
YCOL.	param			003e
XCOL.	param			0042
NYPOL	param			0046
I	local	INTEGER*4	4	0000
J	local	INTEGER*4	4	0004
K	local	INTEGER*4	4	0008
ZZCOL	local	REAL*4	4	000c
NNF	local	INTEGER*4	4	0010
ZZ1	local	REAL*4	4	0014
NNI	local	INTEGER*4	4	0018
DELTAX1	local	REAL*4	4	001c
DELTAY2	local	REAL*4	4	0020
DELTAZ1	local	REAL*4	4	0024
DELTAZ2	local	REAL*4	4	0028
IUCODE.	local	INTEGER*4	4	002c

Symbolic Constant	Type	Value
MCOORD.	INTEGER*4	25
MSOIL	INTEGER*4	5
NUMCOL.	INTEGER*4	10
NCORN	INTEGER*4	4
MAXSUR.	INTEGER*4	2000

Global Symbols

Name	Class	Type	Size	Offset
PARAM1.	FSUBRT	***	***	0000

Code size = 04af (1199)
Data size = 000c (12)
Bss size = 0030 (48)

No errors detected

```
^H                                                                    PAGE   1
                                                                   04-12-91
                                                                   12:08:37

Line#  Source Line          Microsoft FORTRAN Optimizing Compiler Version 5.00

     1        SUBROUTINE POLYGO (NPPOLY,XVPOL,YVERTICE,DELTA,COD,DIFF,K1,RANDC,
     2       1RANDL,RANDR,XROW,Y,Z,NY,YVPOL)
     3        INTEGER XROW
     4  $include:'CURRENTF.INC'
      ***** Begin listing of: CURRENTF.INC
     1  *
     2  *========================= Prologue ====================================
     3  *
     4  * Purpose:
     5  *    Include file with parameter declaration for the program PCSTL3D
     6  *
     7  * History:
     8  *    Version         Programmer     Date          Description
     9  *    -------         ----------     ----          -----------
    10  *    1.0             G.Moshkovich                 created
    11  *
    12  * IN args/commons           Units            Description
    13  * ---------------           -----            -----------
    14  *
    15  * OUT args/commons          Units            Description
    16  * ----------------          -----            -----------
    17  *
    18  * INOUT args/commons        Units            Description
    19  * ------------------        -----            -----------
    20  *
    21  * Processing:
    22  *    none
    23  *
    24  * Special Requirements:
    25  *    none
    26  *
    27  *------------------------- Include files ------------------------------
    28  *------------------------- Constant declarations ----------------------
    29        integer MCOORD, MSOIL, NUMCOL, NCORN
    30
    31        parameter (MCOORD = 25, MSOIL = 5)
    32        parameter (NUMCOL = 10, NCORN = 4)
    33        PARAMETER (MAXSUR=2000)
    34
    35  *------- MCOORD - maximum number of points in each direction
    36  *------- MSOIL -  maximum number of soil layers
    37  *------- NUMCOL - maximum number of generated columns
    38  *------- NCORN - number of nods for each column (do not change)
    39
    40  *------------------------- Argument declarations ----------------------
    41  *------------------------- Global/External declarations ---------------
    42  *------------------------- Local declarations -------------------------
    43
    44
    45
      ***** End listing of: CURRENTF.INC
     5        REAL K1,N30,N45,N85,N89,T(30),YVERTICE(28),DELTA(MCOORD),
     6       1XVPOL(MCOORD),YVPOL(MCOORD),Y(MCOORD),Z(MSOIL,MCOORD,MCOORD)
     7        CHARACTER COD
     8  C.....this routine generates random surfaces.........................
     9  C.....define values in radians.......................................
    10        N30=30*3.141593/180
    11        N45=45*3.141593/180
```

Line# Source Line Microsoft FORTRAN Optimizing Compiler Version 5.00

```
      N85=85*3.141593/180
      N89=89*3.141593/180
      T(1)=0
      NPPOL=NPPOLY+1
      DO 30 I=2,NPPOLY
          NCONT=0
          J=I+DIFF
          IF (COD.EQ.'c') THEN
              CALL RNDC (RANDC)
              RAND=RANDC
          END IF
          IF (COD.EQ.'l') THEN
              CALL RNDL (RANDL)
              RAND=RANDL
          END IF
          IF (COD.EQ.'r') THEN
              CALL RNDR (RANDR)
              RAND=RANDR
          END IF
C.......If ny=0 it means that we are calculating the body of the......
C.......polygonal.....................................................
          IF ((I.EQ.2).AND.((COD.EQ.'c').OR.(NY.EQ.0))) THEN
              IF (COD.NE.'c') THEN
                  T(2)=N30*RAND**2
                  YVPOL(2)=YVPOL(1)+(XVPOL(2)-XVPOL(1))*TAN(T(2))
              ELSE
                  T(2)=-N45+(0.95*ATAN(K1)+N45)*RAND**2
                  YVPOL(2)=YVPOL(1)+(XVPOL(2)-XVPOL(1))*TAN(T(2))
              END IF
          ELSE
              IF (COD.EQ.'c') THEN
                  CALL RNDC (RANDC)
                  RAND=RANDC
              END IF
              IF (COD.EQ.'l') THEN
                  CALL RNDL (RANDL)
                  RAND=RANDL
              END IF
              IF (COD.EQ.'r') THEN
                  CALL RNDR (RANDR)
                  RAND=RANDR
              END IF
 10           YVPOL(I)=YVERTICE(J)+RAND*DELTA(J)
              T(I)=ATAN((YVPOL(I)-YVPOL(I-1))/(XVPOL(I)-XVPOL(I-1)))
              IF (I.EQ.2) GO TO 20
              IF (T(I).GT.N85) THEN
                  IF (COD.EQ.'c') THEN
                      CALL RNDC (RANDC)
                      RAND=RANDC
                  END IF
                  IF (COD.EQ.'l') THEN
                      CALL RNDL (RANDL)
                      RAND=RANDL
                  END IF
                  IF (COD.EQ.'r') THEN
                      CALL RNDR (RANDR)
                      RAND=RANDR
                  END IF
```

Line# Source Line Microsoft FORTRAN Optimizing Compiler Version 5.00

```
                    GO TO 10
                END IF
                XTESTE=XVPOL(1)+2*(XVPOL(NPPOL)-XVPOL(1))/3
                IF ((XVPOL(I).GT.XTESTE).AND.(T(I).LT.T(I-1))) THEN
                    TTESTE=ATAN((YVERTICE(J)+DELTA(J)-YVPOL(I-1))/
     1               (XVPOL(I)-XVPOL(I-1)))
                    IF ((TTESTE.GE.T(I-1)).AND.(NCONT.LE.5)) THEN
                        NCONT=NCONT+1
                        IF (COD.EQ.'c') THEN
                            CALL RNDC (RANDC)
                            RAND=RANDC
                        END IF
                        IF (COD.EQ.'1') THEN
                            CALL RNDL (RANDL)
                            RAND=RANDL
                        END IF
                        IF (COD.EQ.'r') THEN
                            CALL RNDR (RANDR)
                            RAND=RANDR
                        END IF
                        GO TO 10
                    ELSE
                        YVPOL(I)=YVERTICE(J)+DELTA(J)
                        T(I)=ATAN((YVPOL(I)-YVPOL(I-1))/(XVPOL(I)-XVPOL(I
     1                   1)))
                    END IF
                ELSE
                END IF
                IF (T(I).LE.T(I-1)) THEN
                    IF (COD.NE.'c') THEN
                        T(I)=T(I-1)
                    ELSE
                        IF ((T(I)-T(I-1)).LT.(-N45*RAND**RAND)) THEN
                            V=T(I-1)-N45*RAND**RAND
                            IF (V.GT.(-N45)) THEN
                                T(I)=V
                            ELSE
                                T(I)=-N45
                            END IF
                        END IF
                    END IF
                ELSE
                    IF ((T(I)-T(I-1)).GE.(N45*RAND**RAND)) THEN
                        IF ((T(I-1)+N45*RAND**RAND).GT.N85) THEN
                            T(I)=N85
                        ELSE
                            T(I)=T(I-1)+N45*RAND**RAND
                        END IF
                    END IF
                END IF
                YVPOL(I)=YVPOL(I-1)+(XVPOL(I)-XVPOL(I-1))*TAN(T(I))
            END IF
C.....now , check if yvpol is within limits.....................
 20         IF (YVPOL(I).LT.YVERTICE(J)) YVPOL(I)=YVERTICE(J)
            IF (YVPOL(I).GT.(YVERTICE(J)+DELTA(J))) YVPOL(I)=YVERTICE(J)+
     1       DELTA(J)
            T(I)=ATAN((YVPOL(I)-YVPOL(I-1))/(XVPOL(I)-XVPOL(I-1)))
C.....final of "DO" procedure...................................
```

Line# Source Line Microsoft FORTRAN Optimizing Compiler Version 5.00

```
  128   30   CONTINUE
  129        IF (COD.NE.'c') GO TO 60
  130   40   T(NPPOL)=ATAN((YVPOL(NPPOL)-YVPOL(NPPOLY))/(XVPOL(NPPOL)-
  131       1XVPOL(NPPOLY)))
  132        IF (T(NPPOL).GT.N89) THEN
  133            XVPOL(NPPOL)=XVPOL(NPPOL)+1
  134            XTESTE=XVPOL(NPPOL)
  135            CALL COORYZ (XROW,Y,Z,NY,XTESTE,YTESTE,ALPHA)
  136            YVPOL(NPPOL)=YTESTE
  137            GO TO 40
  138        ELSE
  139        END IF
  140   50   IF (T(NPPOL).LT.T(NPPOLY)) THEN
  141            XVPOL(NPPOL)=XVPOL(NPPOL)-1
  142            XTESTE=XVPOL(NPPOL)
  143            CALL COORYZ (XROW,Y,Z,NY,XTESTE,YTESTE,ALPHA)
  144            YVPOL(NPPOL)=YTESTE
  145            T(NPPOL)=ATAN((YVPOL(NPPOL)-YVPOL(NPPOLY))/(XVPOL(NPPOL)-
  146       1     XVPOL(NPPOLY)))
  147            GO TO 50
  148        ELSE
  149        END IF
  150   60   RETURN
  151        END
```

POLYGO Local Symbols

Name	Class	Type	Size	Offset
YVPOL	param			0006
NY	param			000a
Z	param			000e
Y	param			0012
XROW	param			0016
RANDR	param			001a
RANDL	param			001e
RANDC	param			0022
K1	param			0026
DIFF	param			002a
COD	param			002e
DELTA	param			0032
YVERTICE	param			0036
XVPOL	param			003a
NPPOLY	param			003e
NCONT	local	INTEGER*4	4	0000
I	local	INTEGER*4	4	0004
NPPOL	local	INTEGER*4	4	0008
J	local	INTEGER*4	4	000c
T	local	REAL*4	120	0010
V	local	REAL*4	4	0088
TTESTE	local	REAL*4	4	008c
XTESTE	local	REAL*4	4	0090
YTESTE	local	REAL*4	4	0094
RAND	local	REAL*4	4	0098
ALPHA	local	REAL*4	4	009c
N30	local	REAL*4	4	00a0
N45	local	REAL*4	4	00a4

^H

Microsoft FORTRAN Optimizing Compiler Version 5.00

POLYGO Local Symbols

Name	Class	Type	Size	Offset
N85	local	REAL*4	4	00a8
N89	local	REAL*4	4	00ac

Symbolic Constant	Type	Value
MCOORD	INTEGER*4	25
MSOIL	INTEGER*4	5
NUMCOL	INTEGER*4	10
NCORN	INTEGER*4	4
MAXSUR	INTEGER*4	2000

Global Symbols

Name	Class	Type	Size	Offset
COORYZ	extern	***	***	***
POLYGO	FSUBRT	***	***	0000
RNDC	extern	***	***	***
RNDL	extern	***	***	***
RNDR	extern	***	***	***

Code size = 0931 (2353)
Data size = 0030 (48)
Bss size = 00b0 (176)

No errors detected

```
^H                                                                    PAGE   1
                                                                   04-12-91
                                                                   12:08:43

 Line#  Source Line          Microsoft FORTRAN Optimizing Compiler Version 5.00

     1        SUBROUTINE RNDC (X)
     2  *
     3  *======================== Prologue ====================================
     4  *
     5  * Purpose:
     6  *    Generate random number numbers for the axis
     7  *
     8  * History:
     9  *    Version         Programmer     Date          Description
    10  *    -------         ----------     ----          -----------
    11  *    1.0             J.E.Thomas                   created
    12  *    2.0             G.Moshkovich                 code beautified,
    13  *                                                 variables declared
    14  *
    15  * IN args/commons           Units            Description
    16  * ---------------           -----            -----------
    17  *
    18  * OUT args/commons          Units            Description
    19  * ----------------          -----            -----------
    20  *
    21  * INOUT args/commons        Units            Description
    22  * ------------------        -----            -----------
    23  * x                         N/A              Generated random number
    24  *
    25  * Processing:
    26  *      Convert seed and given numbers to the pseudo-random numbers
    27  * with integer and fractional part processing.
    28  *
    29  * Special Requirements:
    30  *    none
    31  *
    32  *------------------------ Include files -------------------------------
    33  *------------------------ Constant declarations -----------------------
    34  *------------------------ Argument declarations -----------------------
    35        REAL X
    36  *------------------------ Global/External declarations ---------------
    37  *------------------------ Local declarations --------------------------
    38        REAL RM
    39        INTEGER K,J,M,IX,IRAND
    40        DATA K,J,M,RM/5701,3612,566927,566927.0/
    41  *------------------------ Code ----------------------------------------
    42        IX=INT(X*RM)
    43        IRAND=MOD(J*IX+K,M)
    44        X=(REAL(IRAND)+0.5)/RM
    45        RETURN
    46        END


RNDC  Local Symbols

Name                          Class   Type              Size   Offset

X . . . . . . . . . . . . . . param                            0006
K . . . . . . . . . . . . . . local   INTEGER*4             4    0000
IX. . . . . . . . . . . . . . local   INTEGER*4             4    0000
J . . . . . . . . . . . . . . local   INTEGER*4             4    0004
IRAND . . . . . . . . . . . . local   INTEGER*4             4    0004
M . . . . . . . . . . . . . . local   INTEGER*4             4    0008
```

^H

Microsoft FORTRAN Optimizing Compiler Version 5.00

RNDC Local Symbols

Name	Class	Type	Size	Offset
RM.	local	REAL*4	4	000c

Global Symbols

Name	Class	Type	Size	Offset
RNDC.	FSUBRT	***	***	0000

Code size = 0066 (102)
Data size = 0014 (20)
Bss size = 0008 (8)

No errors detected

^H

Line# Source Line Microsoft FORTRAN Optimizing Compiler Version 5.00

```
      $title:'PCSTBL3D v2.0'
      $subtitle:'Random Left Side Numbers'
            SUBROUTINE RNDL (X)
      *
      *======================== Prologue ====================================
      *
      * Purpose:
      *    Generate random number numbers for the left side of the 3D surface
      *
      * History:
      *    Version          Programmer      Date          Description
      *    -------          ----------      ----          -----------
      *    1.0              J.E.Thomas                    created
      *    2.0              G.Moshkovich                  code beautified,
      *                                                   variables declared
      *
      * IN args/commons           Units            Description
      * ---------------           -----            -----------
      *
      * OUT args/commons          Units            Description
      * ----------------          -----            -----------
      *
      * INOUT args/commons        Units            Description
      * ------------------        -----            -----------
      * x                         N/A              Generated random number
      *
      * Processing:
      *      Convert seed and given numbers to the pseudo-random numbers
      * with integer and fractional part processing.
      *
      * Special Requirements:
      *    none
      *
      *------------------------ Include files -----------------------------
      *------------------------ Constant declarations ---------------------
      *------------------------ Argument declarations ---------------------
            REAL X
      *------------------------ Global/External declarations --------------
      *------------------------ Local declarations ------------------------
            REAL RM
            INTEGER K,J,M,IX,IRAND
            DATA K,J,M,RM/5701,3612,566927,566927.0/
      *------------------------ Code --------------------------------------
            IX=INT(X*RM)
            IRAND=MOD(J*IX+K,M)
            X=(REAL(IRAND)+0.5)/RM
            RETURN
            END
```

RNDL Local Symbols

Name	Class	Type	Size	Offset
X	param			0006
K	local	INTEGER*4	4	0000
IX.	local	INTEGER*4	4	0000
J	local	INTEGER*4	4	0004

Microsoft FORTRAN Optimizing Compiler Version 5.00

RNDL Local Symbols

Name	Class	Type	Size	Offset
IRAND	local	INTEGER*4	4	0004
M	local	INTEGER*4	4	0008
RM.	local	REAL*4	4	000c

Global Symbols

Name	Class	Type	Size	Offset
RNDL.	FSUBRT	***	***	0000

Code size = 0066 (102)
Data size = 0014 (20)
Bss size = 0008 (8)

No errors detected

^H

Line# Source Line Microsoft FORTRAN Optimizing Compiler Version 5.00

```
      SUBROUTINE RNDR (X)
*
*======================== Prologue ====================================
*
* Purpose:
*    Generate random number numbers for the right side of the 3D surfac
*
* History:
*    Version          Programmer      Date          Description
*    -------          ----------      ----          -----------
*    1.0              J.E.Thomas                    created
*    2.0              G.Moshkovich                  code beautified,
*                                                   variables declared
*
* IN args/commons           Units            Description
* ---------------           -----            -----------
*
* OUT args/commons          Units            Description
* ----------------          -----            -----------
*
* INOUT args/commons        Units            Description
* ------------------        -----            -----------
* x                         N/A              Generated random number
*
* Processing:
*      Convert seed and given numbers to the pseudo-random numbers
* with integer and fractional part processing.
*
* Special Requirements:
*    none
*
*------------------------- Include files -------------------------------
*------------------------- Constant declarations -----------------------
*------------------------- Argument declarations -----------------------
      REAL X
*------------------------- Global/External declarations ----------------
*------------------------- Local declarations --------------------------
      REAL RM
      INTEGER K,J,M,IX,IRAND
      DATA K,J,M,RM/5701,3612,566927,566927.0/
*------------------------- Code ----------------------------------------
      IX=INT(X*RM)
      IRAND=MOD(J*IX+K,M)
      X=(REAL(IRAND)+0.5)/RM
      RETURN
      END
```

RNDR Local Symbols

Name	Class	Type	Size	Offset
X	param			0006
K	local	INTEGER*4	4	0000
IX	local	INTEGER*4	4	0000
J	local	INTEGER*4	4	0004
IRAND	local	INTEGER*4	4	0004
M	local	INTEGER*4	4	0008

^H

Microsoft FORTRAN Optimizing Compiler Version 5.00

RNDR Local Symbols

Name	Class	Type	Size	Offset
RM.	local	REAL*4	4	000c

Global Symbols

Name	Class	Type	Size	Offset
RNDR.	FSUBRT	***	***	0000

Code size = 0066 (102)
Data size = 0014 (20)
Bss size = 0008 (8)

No errors detected

Line# Source Line Microsoft FORTRAN Optimizing Compiler Version 5.00

```
C---Subroutine Wibul calculates and prints out minimum
C---statistical value of the factor of safety
      SUBROUTINE WEIBUL (NFS,FSCUM)
      IMPLICIT REAL (A-Z)
      INTEGER NFS,I,II
      DIMENSION FSCUM(*)
$large: e
      DIMENSION E(4000)
C       ---------------  Weibulls Calculations ------------------
      DO 10 I=1,NFS
          IF (FSCUM(I).LT.399) THEN
              MAXFS=MAX(MAXFS,FSCUM(I))
          END IF
 10   CONTINUE
      DO 30 I=1,NFS
          DO 20 II=1,INT(MAXFS+1)
              IF (FSCUM(I).LE.II/10.) THEN
                  E(II)=E(II)+1.
                  GO TO 30
              END IF
 20       CONTINUE
 30   CONTINUE
      E2=0
      E3=0
      DO 40 I=1,INT(MAXFS+1)
          E2=E2+E(I)*I/10.
          E3=E3+E(I)
 40   CONTINUE
      E6=E2/E3
      E2=0
      E4=0
      DO 50 I=1,INT(MAXFS+1)
          E2=E2+E(I)*(I/10.-E6)**2
          E4=E4+E(I)*(I/10.-E6)**3
 50   CONTINUE
      E7=SQRT(E2/E3)
      E8=E4/E3
      E9=E8/E7**3
C      for b1= e9 get the value of 1/B
      CALL FUNCT1 (B,E9)
      B1=1+B
      B2=1+2*B
      N=B1
      G1=GAMMA(N)
      N=B2
      G2=GAMMA(N)
      B4=E6-E7*G1/SQRT(G2-G1*G1)
      B3=(E6-B4)/G1+B4
      B5=1/B
C---F = ((I1 - B4) / (B3 - B4)) ^ (B5 - 1) * B5 / (B3 - B4) *c
C---EXP(-((I1 - B4) / (B3 - B4)) ^ B5)
      PRINT 60, 'MINIMUM SATISTICAL FACTOR OF SAFETY IS  ',B4
      IF (B4.LE.0.) THEN
          PRINT *
          PRINT *
          PRINT *,'               ***ATTENTION***'
          PRINT *,'MINIMUM STATISTICAL FACTOR OF SAFETY IS NEGATIVE'
          PRINT *,'REVIEW YOUR SURFACE GENERATION LIMITS OR INCREASE'
```

Line# Source Line Microsoft FORTRAN Optimizing Compiler Version 5.00

```
    59            PRINT *,'         NUMBER OF GENERATED SURFACES'
    60            PRINT *
    61        ELSE IF (B4.LE.0.1) THEN
    62            PRINT *
    63            PRINT *
    64            PRINT *,'              ***ATTENTION***'
    65            PRINT *,'MINIMUM STATISTICAL FACTOR OF SAFETY IS VERY SMALL'
    66            PRINT *,'REVIEW YOUR SURFACE GENERATION LIMITS OR INCREASE'
    67            PRINT *,'         NUMBER OF GENERATED SURFACES'
    68            PRINT *
    69        END IF
    70        RETURN
    71  C
    72   60   FORMAT (//,1X,A,F5.2,/)
    73        END
```

WEIBUL Local Symbols

Name	Class	Type	Size	Offset
FSCUM	param			0006
NFS	param			000a
E	local	REAL*4	16000	0000
B	local	REAL*4	4	0002
I	local	INTEGER*4	4	0006
N	local	REAL*4	4	000a
II	local	INTEGER*4	4	000e
B1	local	REAL*4	4	0012
B2	local	REAL*4	4	0016
B3	local	REAL*4	4	001a
B4	local	REAL*4	4	001e
B5	local	REAL*4	4	0022
E2	local	REAL*4	4	0026
G1	local	REAL*4	4	002a
E3	local	REAL*4	4	002e
G2	local	REAL*4	4	0032
E4	local	REAL*4	4	0036
E6	local	REAL*4	4	003a
E7	local	REAL*4	4	003e
E8	local	REAL*4	4	0042
E9	local	REAL*4	4	0046
MAXFS	local	REAL*4	4	004a

```
    74        REAL FUNCTION GAMMA(X)
    75  CD    DOUBLE PRECISION FUNCTION DGAMMA(X)
    76  C------------------------------------------------------------------
    77  C
    78  C This routine calculates the GAMMA function for a real argument X.
    79  C   Computation is based on an algorithm outlined in reference 1.
    80  C   The program uses rational functions that approximate the GAMMA
    81  C   function to at least 20 significant decimal digits.  Coefficients
    82  C   for the approximation over the interval (1,2) are unpublished.
    83  C   Those for the approximation for X .GE. 12 are from reference 2.
    84  C   The accuracy achieved depends on the arithmetic system, the
    85  C   compiler, the intrinsic functions, and proper selection of the
    86  C   machine-dependent constants.
    87  C
```

Line# Source Line Microsoft FORTRAN Optimizing Compiler Version 5.00

```
C
C*****************************************************************
C*****************************************************************
C
C Explanation of machine-dependent constants
C
C beta   - radix for the floating-point representation
C maxexp - the smallest positive power of beta that overflows
C XBIG   - the largest argument for which GAMMA(X) is representable
C          in the machine, i.e., the solution to the equation
C                  GAMMA(XBIG) = beta**maxexp
C XINF   - the largest machine representable floating-point number;
C          approximately beta**maxexp
C EPS    - the smallest positive floating-point number such that
C          1.0+EPS .GT. 1.0
C XMININ - the smallest positive floating-point number such that
C          1/XMININ is machine representable
C
C     Approximate values for some important machines are:
C
C                                 beta       maxexp        XBIG
C
C CRAY-1          (S.P.)           2         8191        966.961
C Cyber 180/855
C   under NOS     (S.P.)           2         1070        177.803
C IEEE (IBM/XT,
C   SUN, etc.)    (S.P.)           2          128        35.040
C IEEE (IBM/XT,
C   SUN, etc.)    (D.P.)           2         1024        171.624
C IBM 3033        (D.P.)          16           63        57.574
C VAX D-Format    (D.P.)           2          127        34.844
C VAX G-Format    (D.P.)           2         1023        171.489
C
C                                 XINF         EPS        XMININ
C
C CRAY-1          (S.P.)    5.45E+2465   7.11E-15    1.84E-2466
C Cyber 180/855
C   under NOS     (S.P.)    1.26E+322    3.55E-15    3.14E-294
C IEEE (IBM/XT,
C   SUN, etc.)    (S.P.)    3.40E+38     1.19E-7     1.18E-38
C IEEE (IBM/XT,
C   SUN, etc.)    (D.P.)    1.79D+308    2.22D-16    2.23D-308
C IBM 3033        (D.P.)    7.23D+75     2.22D-16    1.39D-76
C VAX D-Format    (D.P.)    1.70D+38     1.39D-17    5.88D-39
C VAX G-Format    (D.P.)    8.98D+307    1.11D-16    1.12D-308
C
C*****************************************************************
C*****************************************************************
C
C Error returns
C
C  The program returns the value XINF for singularities or
C     when overflow would occur.  The computation is believed
C     to be free of underflow and overflow.
C
C
C  Intrinsic functions required are:
C
```

Line# Source Line Microsoft FORTRAN Optimizing Compiler Version 5.00

```
146  C     INT, DBLE, EXP, LOG, REAL, SIN
147  C
148  C
149  C References: "An Overview of Software Development for Special
150  C              Functions", W. J. Cody, Lecture Notes in Mathematics,
151  C              506, Numerical Analysis Dundee, 1975, G. A. Watson
152  C              (ed.), Springer Verlag, Berlin, 1976.
153  C
154  C              Computer Approximations, Hart, Et. Al., Wiley and
155  C              sons, New York, 1968.
156  C
157  C  Latest modification: October 12, 1989
158  C
159  C  Authors: W. J. Cody and L. Stoltz
160  C           Applied Mathematics Division
161  C           Argonne National Laboratory
162  C           Argonne, IL 60439
163  C
164  C----------------------------------------------------------------------
165        INTEGER I,N
166        LOGICAL PARITY
167        REAL
168  CD    DOUBLE PRECISION
169       1    C,CONV,EPS,FACT,HALF,ONE,P,PI,Q,RES,SQRTPI,SUM,TWELVE,
170       2    TWO,X,XBIG,XDEN,XINF,XMININ,XNUM,Y,Y1,YSQ,Z,ZERO
171        DIMENSION C(7),P(8),Q(8)
172  C----------------------------------------------------------------------
173  C  Mathematical constants
174  C----------------------------------------------------------------------
175        DATA ONE,HALF,TWELVE,TWO,ZERO/1.0E0,0.5E0,12.0E0,2.0E0,0.0E0/,
176       1     SQRTPI/0.91893853320467274178032973E0/,
177       2     PI/3.14159265358979323846264338E0/
178  CD    DATA ONE,HALF,TWELVE,TWO,ZERO/1.0D0,0.5D0,12.0D0,2.0D0,0.0D0/,
179  CD   1     SQRTPI/0.91893853320467274178032973D0/,
180  CD   2     PI/3.14159265358979323846264338D0/
181  C----------------------------------------------------------------------
182  C  Machine dependent parameters
183  C----------------------------------------------------------------------
184        DATA XBIG,XMININ,EPS/35.040E0,1.18E-38,1.19E-7/,
185       1     XINF/3.4E38/
186  CD    DATA XBIG,XMININ,EPS/171.624D0,2.23D-308,2.22D-16/,
187  CD   1     XINF/1.79D308/
188  C----------------------------------------------------------------------
189  C  Numerator and denominator coefficients for rational minimax
190  C     approximation over (1,2).
191  C----------------------------------------------------------------------
192        DATA P/-1.71618513886549492533811E+0,2.47656508055759199108314E+1
193       1       -3.79804256470945635097577E+2,6.29331155312818442661052E+2
194       2       8.66966202790413211295064E+2,-3.14512729688483675254357E+4
195       3       -3.61444134186911729807069E+4,6.64561438202405440627855E+4
196        DATA Q/-3.08402300119738975254353E+1,3.15350626979604161529144E+2
197       1      -1.01515636749021914166146E+3,-3.10777167157231109440444E+3
198       2        2.25381184209801510330112E+4,4.75584627752788110767815E+3
199       3      -1.34659959864969306392456E+5,-1.15132259675553483497211E+5
200  CD    DATA P/-1.71618513886549492533811D+0,2.47656508055759199108314D+1
201  CD   1       -3.79804256470945635097577D+2,6.29331155312818442661052D+2
202  CD   2       8.66966202790413211295064D+2,-3.14512729688483675254357D+4
203  CD   3       -3.61444134186911729807069D+4,6.64561438202405440627855D+4
```

Line# Source Line Microsoft FORTRAN Optimizing Compiler Version 5.00

```
204  CD    DATA Q/-3.08402300119738975254353D+1,3.15350626979604161529144D+2
205  CD   1      -1.01515636749021914166146D+3,-3.10777167157231109440444D+3
206  CD   2        2.25381184209801510330112D+4,4.75584627752788110767815D+3
207  CD   3      -1.34659959864969306392456D+5,-1.15132259675553483497211D+5
208  C-----------------------------------------------------------------------
209  C  Coefficients for minimax approximation over (12, INF).
210  C-----------------------------------------------------------------------
211       DATA C/-1.910444077728E-03,8.4171387781295E-04,
212      1     -5.952379913043012E-04,7.9365079350035O248E-04,
213      2     -2.77777777777681622553E-03,8.33333333333333331554247E-02,
214      3      5.7083835261E-03/
215  CD    DATA C/-1.910444077728D-03,8.4171387781295D-04,
216  CD   1     -5.952379913043012D-04,7.9365079350035O248D-04,
217  CD   2     -2.77777777777681622553D-03,8.33333333333333331554247D-02,
218  CD   3      5.7083835261D-03/
219  C-----------------------------------------------------------------------
220  C  Statement functions for conversion between integer and float
221  C-----------------------------------------------------------------------
222       CONV(I) = REAL(I)
223  CD    CONV(I) = DBLE(I)
224       PARITY = .FALSE.
225       FACT = ONE
226       N = 0
227       Y = X
228       IF (Y .LE. ZERO) THEN
229  C-----------------------------------------------------------------------
230  C  Argument is negative
231  C-----------------------------------------------------------------------
232            Y = -X
233            Y1 = AINT(Y)
234            RES = Y - Y1
235            IF (RES .NE. ZERO) THEN
236                  IF (Y1 .NE. AINT(Y1*HALF)*TWO) PARITY = .TRUE.
237                  FACT = -PI / SIN(PI*RES)
238                  Y = Y + ONE
239               ELSE
240                  RES = XINF
241                  GO TO 900
242            END IF
243       END IF
244  C-----------------------------------------------------------------------
245  C  Argument is positive
246  C-----------------------------------------------------------------------
247       IF (Y .LT. EPS) THEN
248  C-----------------------------------------------------------------------
249  C  Argument .LT. EPS
250  C-----------------------------------------------------------------------
251            IF (Y .GE. XMININ) THEN
252                  RES = ONE / Y
253               ELSE
254                  RES = XINF
255                  GO TO 900
256            END IF
257         ELSE IF (Y .LT. TWELVE) THEN
258            Y1 = Y
259            IF (Y .LT. ONE) THEN
260  C-----------------------------------------------------------------------
261  C  0.0 .LT. argument .LT. 1.0
```

Line# Source Line Microsoft FORTRAN Optimizing Compiler Version 5.00

```
C-----------------------------------------------------------------------
                  Z = Y
                  Y = Y + ONE
               ELSE
C-----------------------------------------------------------------------
C  1.0 .LT. argument .LT. 12.0, reduce argument if necessary
C-----------------------------------------------------------------------
                  N = INT(Y) - 1
                  Y = Y - CONV(N)
                  Z = Y - ONE
            END IF
C-----------------------------------------------------------------------
C  Evaluate approximation for 1.0 .LT. argument .LT. 2.0
C-----------------------------------------------------------------------
            XNUM = ZERO
            XDEN = ONE
            DO 260 I = 1, 8
               XNUM = (XNUM + P(I)) * Z
               XDEN = XDEN * Z + Q(I)
  260       CONTINUE
            RES = XNUM / XDEN + ONE
            IF (Y1 .LT. Y) THEN
C-----------------------------------------------------------------------
C  Adjust result for case  0.0 .LT. argument .LT. 1.0
C-----------------------------------------------------------------------
                  RES = RES / Y1
               ELSE IF (Y1 .GT. Y) THEN
C-----------------------------------------------------------------------
C  Adjust result for case  2.0 .LT. argument .LT. 12.0
C-----------------------------------------------------------------------
                  DO 290 I = 1, N
                     RES = RES * Y
                     Y = Y + ONE
  290             CONTINUE
            END IF
         ELSE
C-----------------------------------------------------------------------
C  Evaluate for argument .GE. 12.0,
C-----------------------------------------------------------------------
            IF (Y .LE. XBIG) THEN
                  YSQ = Y * Y
                  SUM = C(7)
                  DO 350 I = 1, 6
                     SUM = SUM / YSQ + C(I)
  350             CONTINUE
                  SUM = SUM/Y - Y + SQRTPI
                  SUM = SUM + (Y-HALF)*LOG(Y)
                  RES = EXP(SUM)
               ELSE
                  RES = XINF
                  GO TO 900
            END IF
      END IF
C-----------------------------------------------------------------------
C  Final adjustments and return
C-----------------------------------------------------------------------
      IF (PARITY) RES = -RES
      IF (FACT .NE. ONE) RES = FACT / RES
```

Line# Source Line Microsoft FORTRAN Optimizing Compiler Version 5.00

```
  320    900 GAMMA = RES
  321  CD900 DGAMMA = RES
  322        RETURN
  323  C ---------- Last line of GAMMA ----------
  324        END
```

GAMMA Local Symbols

Name	Class	Type	Size	Offset
GAMMA	param			0006
X	param			0008
XNUM.	local	REAL*4	4	004e
I	local	INTEGER*4	4	0052
Y1.	local	REAL*4	4	0056
N	local	INTEGER*4	4	005a
Y	local	REAL*4	4	005e
PARITY.	local	LOGICAL*4	4	0062
Z	local	REAL*4	4	0066
FACT.	local	REAL*4	4	006a
RES	local	REAL*4	4	006e
XDEN.	local	REAL*4	4	0072
SUM	local	REAL*4	4	0076
YSQ	local	REAL*4	4	007a
ONE	local	REAL*4	4	01bc
HALF.	local	REAL*4	4	01c0
TWELVE.	local	REAL*4	4	01c4
TWO	local	REAL*4	4	01c8
ZERO.	local	REAL*4	4	01cc
SQRTPI.	local	REAL*4	4	01d0
PI.	local	REAL*4	4	01d4
XBIG.	local	REAL*4	4	01d8
XMININ.	local	REAL*4	4	01dc
EPS	local	REAL*4	4	01e0
XINF.	local	REAL*4	4	01e4
P	local	REAL*4	32	01e8
Q	local	REAL*4	32	0208
C	local	REAL*4	28	0228

```
  325  C-------------------- calculate 1/B ----------------------
  326        SUBROUTINE FUNCT1 (B,E9)
  327        IMPLICIT REAL (A-Z)
  328        JI=.02
  329        JF=2.1
  330   10   J=JI
  331        NI=FUNCT2(J)
  332        J=JF
  333        NF=FUNCT2(J)
  334        A=(NF-NI)/(JF-JI)
  335        B=NI-A*JI
  336        NJ=FUNCT2(J)
  337        IF ((NJ-E9).LT..001) GO TO 20
  338        IF (NJ.GT.E9) THEN
  339            JF=J
  340        ELSE
  341            JI=J
```

Line# Source Line Microsoft FORTRAN Optimizing Compiler Version 5.00

```
   342         END IF
   343         GO TO 10
   344    20   B=J
   345         RETURN
   346         END
```

FUNCT1 Local Symbols

Name	Class	Type	Size	Offset
E9.	param			0006
B	param			000a
A	local	REAL*4	4	007e
J	local	REAL*4	4	0082
JF.	local	REAL*4	4	0086
JI.	local	REAL*4	4	008a
NF.	local	REAL*4	4	008e
NI.	local	REAL*4	4	0092
NJ.	local	REAL*4	4	0096

```
   347   C-------------------------------------------------------------
   348   C-------------------------------------------------------------
   350         FUNCTION FUNCT2 (J)
   351         IMPLICIT REAL (A-Z)
   352   C----------- calculate n(j) ----------------------------------
   353         N=1+J
   354         G1=GAMMA(N)
   355         N=1+2*J
   356         G2=GAMMA(N)
   357         N=1+3*J
   358         G3=GAMMA(N)
   359         N1=G3-3*G2*G1+2*G1**3
   360         N22=(G2-G1*G1)**1.5
   361         FUNCT2=N1/N22
   362         RETURN
   363         END
```

FUNCT2 Local Symbols

Name	Class	Type	Size	Offset
FUNCT2.	param			0006
J	param			0008
N	local	REAL*4	4	009a
N22	local	REAL*4	4	009e
G1.	local	REAL*4	4	00a2
G2.	local	REAL*4	4	00a6
G3.	local	REAL*4	4	00aa
N1.	local	REAL*4	4	00ae

Global Symbols

Name	Class	Type	Size	Offset
FUNCT1.	FSUBRT	***	***	09bc

^H

Microsoft FORTRAN Optimizing Compiler Version 5.00

Global Symbols

Name	Class	Type	Size	Offset
FUNCT2.	FFUNCT	REAL*4	***	0b1a
GAMMA	FFUNCT	REAL*4	***	059b
WEIBUL.	FSUBRT	***	***	0000

Code size = 0c45 (3141)
Data size = 0272 (626)
Bss size = 00b2 (178)

No errors detected

```
^H                                                                    PAGE   1
                                                                   04-12-91
                                                                   12:08:04

 Line#  Source Line          Microsoft FORTRAN Optimizing Compiler Version 5.00

     1        SUBROUTINE GENSUR (NX,NY,X,Y,Z,XAPRIN,YMIN1,DYMIN1,YMIN2,DYMIN2,
     2       1XMIN1,DXMIN1,XMIN2,DXMIN2,ZMIN,DZMIN,YPA1,NXEND,YPA2,NYSTAR,NYPOL
     3       2XIPOL,XFPOL,NXSTAR,NXPOL,XPOL,ZPOL,YPOL,XCOL,YCOL,ZCOL,NCOLEF,
     4       3NCORIG,NPTLEF,NPTRIG,ZSOL,NSOIL,NYEND,DIFF)
     5  C.....this routine generates three dimensional surfaces
     6  C.....It calls routines POLYGO and POLYGZ
     7  $include:'CURRENTF.INC'
      ***** Begin listing of: CURRENTF.INC
     1  *
     2  *========================= Prologue ====================================
     3  *
     4  * Purpose:
     5  *    Include file with parameter declaration for the program PCSTL3D
     6  *
     7  * History:
     8  *    Version         Programmer     Date          Description
     9  *    -------         ----------     ----          -----------
    10  *    1.0             G.Moshkovich                 created
    11  *
    12  * IN args/commons           Units            Description
    13  * ---------------           -----            -----------
    14  *
    15  * OUT args/commons          Units            Description
    16  * ----------------          -----            -----------
    17  *
    18  * INOUT args/commons        Units            Description
    19  * ------------------        -----            -----------
    20  *
    21  * Processing:
    22  *    none
    23  *
    24  * Special Requirements:
    25  *    none
    26  *
    27  *------------------------ Include files -----------------------------
    28  *------------------------ Constant declarations ---------------------
    29        integer MCOORD, MSOIL, NUMCOL, NCORN
    30
    31        parameter (MCOORD = 25, MSOIL = 5)
    32        parameter (NUMCOL = 10, NCORN = 4)
    33        PARAMETER (MAXSUR=2000)
    34
    35  *------- MCOORD - maximum number of points in each direction
    36  *------- MSOIL -  maximum number of soil layers
    37  *------- NUMCOL - maximum number of generated columns
    38  *------- NCORN - number of nods for each column (do not change)
    39
    40  *------------------------ Argument declarations ---------------------
    41  *------------------------ Global/External declarations --------------
    42  *------------------------ Local declarations ------------------------
    43
    44
    45
      ***** End listing of: CURRENTF.INC
     8        DIMENSION X(MCOORD), Y(MCOORD), Z(MSOIL,MCOORD,MCOORD),
     9       1XMIN1(MCOORD), DXMIN1(MCOORD), XMIN2(MCOORD), DXMIN2(MCOORD),
    10       2ZMIN(MCOORD,MCOORD), DZMIN(MCOORD,MCOORD), YPOLAX(MCOORD),
    11       3ZPOLAX(MCOORD), ZMIAX(MCOORD), DZMIAX(MCOORD), XIPOL(MCOORD),
```

Line# Source Line Microsoft FORTRAN Optimizing Compiler Version 5.00

```
      4XFPOL(MCOORD), XMIN3(MCOORD), DXMIN3(MCOORD), NXPOL(MCOORD),
      5NXSTAR(MCOORD), NXEND(MCOORD), XPOL(MCOORD,MCOORD), YPOL(MCOORD),
      6ZPOL(MCOORD,MCOORD), XDIFF(MCOORD), XPOL3(MCOORD), ZPOL3(MCOORD),
      7XCOL(MCOORD,-NUMCOL:NUMCOL,NCORN), YCOL(MCOORD,-NUMCOL:NUMCOL,
      8NCORN), ZCOL(MCOORD,-NUMCOL:NUMCOL,NCORN), NCOLEF(MCOORD),
      9NPTLEF(MCOORD), NCORIG(MCOORD), NPTRIG(MCOORD), ZSOL(MSOIL,MCOORD
      X-NUMCOL:NUMCOL,NCORN)
       INTEGER XAPRIN,XROW,DIFF,XDIFF
       CHARACTER CODE
       REAL K1

C.....USE SYSTEM TIME AS SEED FOR RANDOM ROUTINS
       CALL GETTIM(IHR,IMIN,ISEC,I100TH)
       RANDC=(I100TH+0.5)/100
       CALL GETTIM(IHR,IMIN,ISEC,I100TH)
       RANDL=(I100TH+0.5)/100
       CALL GETTIM(IHR,IMIN,ISEC,I100TH)
       RANDR=(I100TH+0.5)/100
C.....GENERATES THE MAIN AXIS POLYGONAL.............................
C.....first vertice of surface on Y direction.......................
       CALL RNDC (RANDC)
       YPA1=YMIN1+RANDC*DYMIN1
       YTESTE=YPA1
       XROW=XAPRIN
       CALL COORYZ (XROW,Y,Z,NY,YTESTE,ZFINAL,ALPHA)
       ZPA1=ZFINAL
       K1=ALPHA
C.....last vertice of surface on Y direction........................
       CALL RNDC (RANDC)
       YPA2=YMIN2+RANDC*DYMIN2
       YTESTE=YPA2
       XROW=XAPRIN
       CALL COORYZ (XROW,Y,Z,NY,YTESTE,ZFINAL,ALPHA)
       ZPA2=ZFINAL
C.....calculation of number of vertices between extremities.........
       DO 10 I=1,NY
           IF (Y(I).GT.YPA1) THEN
               NYSTAR=I
               GO TO 20
           END IF
 10    CONTINUE
 20    CONTINUE
       DO 30 I=NY,1,-1
           IF (Y(I).LT.YPA2) THEN
               NYEND=I
               GO TO 40
           END IF
 30    CONTINUE
 40    CONTINUE
C.....nypol = number of Y vertices in the main axis polygonal........
C.....including extremities.........................................
       NYPOL=NYEND-NYSTAR+3
       YPOLAX(1)=YPA1
       ZPOLAX(1)=ZPA1
       YPOLAX(NYPOL)=YPA2
       ZPOLAX(NYPOL)=ZPA2
       NYPPOL=NYPOL-1
       DIFF=NYSTAR-2
```

Line# Source Line Microsoft FORTRAN Optimizing Compiler Version 5.00

```
C.....transform all y coordinates to ypolax coordinates.............
      DO 50 I=2,NYPPOL
          J=I+DIFF
          YPOLAX(I)=Y(J)
 50   CONTINUE
C......here zmin is transformed in an unidimensional array to fit the
C......routine call internal dimension.............................
      DO 60 I=1,NY
          ZMIAX(I)=ZMIN(XAPRIN,I)
          DZMIAX(I)=DZMIN(XAPRIN,I)
 60   CONTINUE
C.....call routine to random generate the coordinates..............
C.....code identifies which side is being generated (l=left,r=right,
C.....c=axis)
      CODE='c'
C               {------------------'input'------------------}
      CALL POLYGO (NYPPOL,YPOLAX,ZMIAX,DZMIAX,CODE,DIFF,K1,RANDC,RANDL,
     1RANDR,XAPRIN,Y,Z,NY,ZPOLAX)
C                                              {output}
C.....NOW GENERATES THE LEFT SIDE INTERSECTION SURFACE/GROUND........
      CODE='l'
C.....these are the extremities of the intersection (on the main axis)
      XIPOL(1)=X(XAPRIN)
      XIPOL(NYPOL)=X(XAPRIN)
C               {------------------'input'------------------}
      CALL POLYGO (NYPPOL,YPOLAX,XMIN1,DXMIN1,CODE,DIFF,K1,RANDC,RANDL,
     1RANDR,XAPRIN,Y,Z,NY,XIPOL)
C                                            {output}
C.....NOW GENERATES THE RIGHT SIDE INTERSECTION SURFACE/GROUND.......
      CODE='r'
C.....these are the extremities of the intersection (on the main axis)
C.....the signal is inverted to let the angle definition in the polygo
C.....nal routine be the same even though here the orientation of the
C.....boundaries are inversed.......................................
      XFPOL(1)=-X(XAPRIN)
      XFPOL(NYPOL)=-X(XAPRIN)
C.....now transform arrays xmin2 and dxmin2 so that routine can be
C.....used without changing orientation of angles...................
      DO 70 I=1,NY
          XMIN3(I)=-(XMIN2(I)+DXMIN2(I))
          DXMIN3(I)=DXMIN2(I)
 70   CONTINUE
C               {------------------'input'------------------}
      CALL POLYGO (NYPPOL,YPOLAX,XMIN3,DXMIN3,CODE,DIFF,K1,RANDC,RANDL,
     1RANDR,XAPRIN,Y,Z,NY,XFPOL)
C                                            {output}
      DO 80 I=1,NYPOL
          XFPOL(I)=-XFPOL(I)
 80   CONTINUE
C.....NOW CALCULATE THE BODY OF THE SURFACE ITSELF..................
C.....calculate , for each Y coordinate , the amount of vertices.....
C.....in the X direction ...........................................
      NXPOL(1)=1
      NXPOL(NYPOL)=1
      DO 200 I=2,NYPPOL
C.......define limiting variables..................................
          J1=I+DIFF
          XI=XIPOL(I)
```

Line# Source Line Microsoft FORTRAN Optimizing Compiler Version 5.00

```
128             XF=XFPOL(I)
129     C.....calculate the number of points in the X direction for that Y...
130     C.....coordinate.....................................................
131             DO 90 J=1,XAPRIN
132                 IF (X(J).GT.XI) THEN
133                     NXSTAR(I)=J
134                     GO TO 100
135                 END IF
136      90     CONTINUE
137      100    CONTINUE
138             DO 110 J=XAPRIN,NX
139                 IF (X(J).GE.XF) THEN
140                     NXEND(I)=J-1
141                     GO TO 120
142                 END IF
143      110    CONTINUE
144      120    CONTINUE
145             NXPOL(I)=NXEND(I)-NXSTAR(I)+3
146             XDIFF(I)=NXSTAR(I)-2
147     C.....association of the polygonal relative X coordinates with the....
148     C.....absolute reference X axis.....................................
149     C.....xpol(il,i) is the coordinate X of the il-enth point of the surf.
150     C.....at the i-enth Y coordinate. il varies from 1 to nxpol(i) , and i
151     C.....varies from 1 to nypol
152             XPOL(1,I)=XI
153             XPOL(NXPOL(I),I)=XF
154             L=NXSTAR(I)
155             LIM=NXPOL(I)-1
156             DO 130 I1=2,LIM
157                 XPOL(I1,I)=X(L)
158                 L=L+1
159      130    CONTINUE
160     C.....calculate the Z values for the initial and final points.........
161             NYROW=I
162             XTESTE=XI
163             CALL COORXZ (NYROW,X,Z,NX,XTESTE,ZTESTE)
164             ZPOL(1,I)=ZTESTE
165     C       .....................................
166             XTESTE=XF
167             CALL COORXZ (NYROW,X,Z,NX,XTESTE,ZTESTE)
168             ZPOL(NXPOL(I),I)=ZTESTE
169     C.....Calculate the values of Z of polygonal on the LEFT..............
170     C.....transform  array zmin to fit dimension of routine polygonal.
171     C.....At this part, the polygonal will be generated assuming that
172     C.....xpol3 and zmiax start at x = xaprin and the axis of X increses
173     C.....to the left . Thus zmiax(1) = zmin(xaprin) and ndiffx =0 (both
174     C.....start at xaprin ) .
175             L=XAPRIN
176             DO 140 I1=1,XAPRIN
177                 ZMIAX(I1)=ZMIN(L,I)
178                 DZMIAX(I1)=DZMIN(L,I)
179                 L=L-1
180      140    CONTINUE
181             NXPA=XAPRIN-XDIFF(I)
182             NXPAB=NXPA-1
183             ZPOL(NXPA,I)=ZPOLAX(I)
184     C.....no≈ transforϕ array≤ xpo∞  s∩ tha∫ routinσ caє bσ..............
185     C.....used without changing orientation of angles....................
```

Line# Source Line Microsoft FORTRAN Optimizing Compiler Version 5.00

```
  186            K=NXPA
  187            DO 150 J=1,NXPA
  188                XPOL3(J)=-XPOL(K,I)
  189                K=K-1
  190   150      CONTINUE
  191            ZPOL3(1)=ZPOLAX(I)
  192  C.....angle is horizontal
  193            K1=0
  194            CODE='l'
  195            NDIFFX=0
  196            NYNOW=I
  197  C                {------------------'input'--------------------}
  198            CALL POLYGO (NXPAB,XPOL3,ZMIAX,DZMIAX,CODE,NDIFFX,K1,RANDC,
  199       1     RANDL,RANDR,NYNOW,X,Z,0,ZPOL3)
  200  C                                          {output}
  201  C.....restore array to original.....................................
  202            K=NXPA-1
  203            DO 160 J=2,NXPA-1
  204                ZPOL(K,I)=ZPOL3(J)
  205                K=K-1
  206   160      CONTINUE
  207  C.....Calculate values of Z on RIGHT side of polygonal..............
  208  C.....no≈ transforϕ array≤ xpo∞  s∩ tha∫ routinσ caε bσ..............
  209  C.....used without changing orientation of angles....................
  210            I1=1
  211            DO 170 I2=XAPRIN,NX
  212                ZMIAX(I1)=ZMIN(I2,I)
  213                DZMIAX(I1)=DZMIN(I2,I)
  214                I1=I1+1
  215   170      CONTINUE
  216            NXPAB=NXPOL(I)-NXPA
  217            J1=1
  218            DO 180 J=NXPA,NXPOL(I)
  219                XPOL3(J1)=XPOL(J,I)
  220                J1=J1+1
  221   180      CONTINUE
  222            ZPOL3(1)=ZPOLAX(I)
  223  C.....angle is horizontal
  224            K1=0
  225            CODE='r'
  226            NDIFFX=0
  227            NYNOW=I
  228  C                {------------------'input'--------------------}
  229            CALL POLYGO (NXPAB,XPOL3,ZMIAX,DZMIAX,CODE,NDIFFX,K1,RANDC,
  230       1     RANDL,RANDR,NYNOW,X,Z,0,ZPOL3)
  231  C                                          {output}
  232  C.....restore array to original.....................................
  233            K=NXPA+1
  234            DO 190 J=2,NXPAB
  235                ZPOL(K,I)=ZPOL3(J)
  236                K=K+1
  237   190      CONTINUE
  238   200  CONTINUE
  239  C---------------------Transfer coordinates----------------------------
  240        CALL TRANSF (YPA1,YPA2,NYSTAR,NYPOL,Y,YPOL)
  241  C                {------------input-----------}{-out-}
  242  C--------------Calculate columns of the left side----------------------
  243        CALL COLUML (YPA1,YPA2,NYSTAR,NYPOL,X,Y,Z,XAPRIN,XIPOL,NXSTAR,
```

Line# Source Line Microsoft FORTRAN Optimizing Compiler Version 5.00

```
   244       1NXPOL,XPOL,YPOL,XCOL,YCOL,ZCOL,NCOLEF,NPTLEF,ZPOL,ZSOL,XDIFF,
   245       2NSOIL,NPPOL)
   246   C--------------Calculate columns of the right side--------------------
   247        CALL COLUMR (YPA1,YPA2,NYSTAR,NYPOL,NPPOL,X,Y,Z,XAPRIN,XFPOL,
   248       1NXSTAR,NXPOL,XPOL,YPOL,ZPOL,XCOL,YCOL,ZCOL,NCOLEF,NCORIG,NPTLEF,
   249       2NPTRIG,NXEND,ZSOL,XDIFF,NSOIL)
   250        RETURN
   251        END
```

GENSUR Local Symbols

Name	Class	Type	Size	Offset
DIFF.	param			0006
NYEND	param			000a
NSOIL	param			000e
ZSOL.	param			0012
NPTRIG.	param			0016
NPTLEF.	param			001a
NCORIG.	param			001e
NCOLEF.	param			0022
ZCOL.	param			0026
YCOL.	param			002a
XCOL.	param			002e
YPOL.	param			0032
ZPOL.	param			0036
XPOL.	param			003a
NXPOL	param			003e
NXSTAR.	param			0042
XFPOL	param			0046
XIPOL	param			004a
NYPOL	param			004e
NYSTAR.	param			0052
YPA2.	param			0056
NXEND	param			005a
YPA1.	param			005e
DZMIN	param			0062
ZMIN.	param			0066
DXMIN2.	param			006a
XMIN2	param			006e
DXMIN1.	param			0072
XMIN1	param			0076
DYMIN2.	param			007a
YMIN2	param			007e
DYMIN1.	param			0082
YMIN1	param			0086
XAPRIN.	param			008a
Z	param			008e
Y	param			0092
X	param			0096
NY.	param			009a
NX.	param			009e
ZFINAL.	local	REAL*4	4	0000
NPPOL	local	INTEGER*4	4	0004
I	local	INTEGER*4	4	0008
ZMIAX	local	REAL*4	100	000c
J	local	INTEGER*4	4	0070

^H

Microsoft FORTRAN Optimizing Compiler Version 5.00

GENSUR Local Symbols

Name	Class	Type	Size	Offset
K	local	INTEGER*4	4	0074
L	local	INTEGER*4	4	0078
DZMIAX	local	REAL*4	100	007c
XROW	local	INTEGER*4	4	00e0
NYNOW	local	INTEGER*4	4	00e4
CODE	local	CHAR*1	1	00e8
ZPA1	local	REAL*4	4	00ea
XTESTE	local	REAL*4	4	00ee
ZPA2	local	REAL*4	4	00f2
YPOLAX	local	REAL*4	100	00f6
XF	local	REAL*4	4	015a
YTESTE	local	REAL*4	4	015e
ZPOLAX	local	REAL*4	100	0162
ZTESTE	local	REAL*4	4	01c6
NYROW	local	INTEGER*4	4	01ca
XI	local	REAL*4	4	01ce
LIM	local	INTEGER*4	4	01d2
NYPPOL	local	INTEGER*4	4	01d6
IHR	local	INTEGER*4	4	01da
ISEC	local	INTEGER*4	4	01de
ALPHA	local	REAL*4	4	01e2
RANDC	local	REAL*4	4	01e6
IMIN	local	INTEGER*4	4	01ea
XMIN3	local	REAL*4	100	01ee
RANDL	local	REAL*4	4	0252
XDIFF	local	INTEGER*4	100	0256
DXMIN3	local	REAL*4	100	02ba
I100TH	local	INTEGER*4	4	031e
XPOL3	local	REAL*4	100	0322
NXPA	local	INTEGER*4	4	0386
RANDR	local	REAL*4	4	038a
ZPOL3	local	REAL*4	100	038e
NXPAB	local	INTEGER*4	4	03f2
I1	local	INTEGER*4	4	03f6
I2	local	INTEGER*4	4	03fa
J1	local	INTEGER*4	4	03fe
K1	local	REAL*4	4	0402
NDIFFX	local	INTEGER*4	4	0406

Symbolic Constant	Type	Value
MCOORD	INTEGER*4	25
MSOIL	INTEGER*4	5
NUMCOL	INTEGER*4	10
NCORN	INTEGER*4	4
MAXSUR	INTEGER*4	2000

^H

Microsoft FORTRAN Optimizing Compiler Version 5.00

Global Symbols

Name	Class	Type	Size	Offset
COLUML.	extern	***	***	***
COLUMR.	extern	***	***	***
COORXZ.	extern	***	***	***
COORYZ.	extern	***	***	***
GENSUR.	FSUBRT	***	***	0000
GETTIM.	extern	***	***	***
POLYGO.	extern	***	***	***
RNDC.	extern	***	***	***
TRANSF.	extern	***	***	***

Code size = 13ac (5036)
Data size = 000d (13)
Bss size = 040a (1034)

No errors detected

PRE/POSTPROCESSOR

```
DECLARE SUB PopDira (SEARCH$, SHOWITEMS%, FORE%, BACK%, HFORE%, HBACK%, QUADRANT$,
SHADOW%, NUMFILES%, SELECTFILE$, RETURN.CODE%)
DECLARE SUB NewGetIn (FldContent AS STRING, numonly%, MaxLen%, FldRow%, LeftColumn%,
ColorAttr%, ReturnVar AS STRING, AbortVar AS STRING)
'$INCLUDE: 'CURRENTB.BI'

   CLEAR , , 7000

   ON ERROR GOTO LocalHandler

   KEY 15, CHR$(4) + CHR$(&H4F)
   KEY 16, CHR$(132) + CHR$(&H4F)
   ON KEY(15) GOSUB GotEndKey
   ON KEY(16) GOSUB GotEndKey

   Headline1
   Delay 2
   ManeMenu

END

LocalHandler:
     GlobalHandler
     RESUME NEXT

GotEndKey:

    REDIM ARRY%(2000)
    SCRNARRY.SEGMENT% = VARSEG(ARRY%(0))
    SCRNARRY.OFFSET% = VARPTR(ARRY%(0))
   CALL SAVESCRN(-1, SCRNARRY.SEGMENT%, SCRNARRY.OFFSET%, RETURN.CODE%)
   Title$ = "Please choose desired option"
   Foreground% = 4: Background% = 7
   List$(0) = "Cancel                    "
   List$(1) = "Exit and save changes     "
   List$(2) = "Exit and don't save changes"
   CALL POPMENU(Title$, 3, List$(), 2, Foreground%, Background%, Foreground%,
Background%, "0", 1, Choice%, RETURN.CODE%)
    SCRNARRY.SEGMENT% = VARSEG(ARRY%(0))
    SCRNARRY.OFFSET% = VARPTR(ARRY%(0))
   CALL RESTSCRN(-1, SCRNARRY.SEGMENT%, SCRNARRY.OFFSET%, RETURN.CODE%)
   ERASE ARRY%

   SELECT CASE Choice%
   CASE 1
          RETURN

   CASE 2
          PrintData ExitCode
          KEY(15) OFF
          KEY(16) OFF
          ClearVar
          ManeMenu

   CASE 3
        TextLine$(1) = "You are about to loose all your edition"
        TextLine$(2) = "Please press 'y' to confirm this operation"
        TextLine$(3) = "Any other key will resume your current operation "

        AskWindow 3, TextLine$(), KeyPressed$
        IF KeyPressed$ = "y" OR KeyPressed$ = "Y" THEN
            KEY(15) OFF
            KEY(16) OFF
            ClearVar
            ManeMenu
        ELSE
            RETURN
        END IF
```

```
     CASE ELSE
          RETURN
   END SELECT

REM $DYNAMIC
SUB ClearScrn
   CLS
   FOR I = 1 TO 25
      LOCATE I, 1: PRINT STRING$(80, CHR$(177));
   NEXT I
END SUB

SUB Delay (delt)
   LoopFin = TIMER + delt
   DO WHILE TIMER < LoopFin
   LOOP
END SUB

SUB Footer
   COLOR 0, 0
   CLS
   CALL MAKEWIND(23, 4, 24, 76, 2, 1, 11, 0, 0, "", RETURN.CODE%)
   COLOR 1, 11
   LOCATE 23, 15: PRINT "PC-STABL3D - 3 Dimensional Slope Stability Program";
   LOCATE 24, 15: PRINT "                    Version 2.2";
   COLOR 0, 0
END SUB

SUB Headline

     SCREEN 0, 1, 0, 0
     WIDTH 80
     COLOR 1, 7
     ClearScrn
     CALL MAKEWIND(23, 4, 24, 76, 2, 1, 11, 0, 0, "", RETURN.CODE%)
     COLOR 1, 11
     LOCATE 23, 15, 0: PRINT "PC-STABL3D - 3 Dimensional Slope Stability Program"
     LOCATE 24, 15, 0: PRINT "                    Version 2.2 ";
END SUB

SUB Headline1
     SCREEN 0, 1, 0, 0
     WIDTH 80, 25
     COLOR 1, 7
     ClearScrn
     CALL MAKEWIND(9, 18, 16, 65, 2, 0, 7, 1, 0, "", RETURN.CODE%)
     COLOR 0, 7
     LOCATE 9, 22, 0:  PRINT " PC-STABL3D - SLOPE STABILITY PROGRAM ";
     LOCATE 10, 22, 0: PRINT "    GRAPHICAL PRE/POST PROCESSOR      ";
     LOCATE 12, 22, 0: PRINT "   Civil Engineering Department       ";
     LOCATE 13, 22, 0: PRINT "         Purdue University            ";
     LOCATE 15, 22, 0: PRINT "Version 2.1 by J. Eduardo Thomaz, 1987";
     LOCATE 16, 22, 0: PRINT "  Version 2.2 by G. Moshkovich, 1990  ";
END SUB

SUB ManeMenu

   STATIC ExitCode AS INTEGER
   DO
          Headline


'-----------------------------------------------------------------
        '                              Main Menu

'-----------------------------------------------------------------

       List$(0) = "   Create Data File            "
       List$(1) = "   Edit Existing Data File     "
```

```
        List$(2) = "   Read  Data File              "
        List$(3) = "   Plot 3D Geometry            "
        List$(4) = "   Plot Cross Sections         "
        List$(5) = "   Run PCSTBL3D                "
        List$(6) = "   Plot 3D Surface Contours    "
        List$(7) = "   Plot Surface Cross Section  "
        List$(8) = "   Exit Program                "

        Title$ = "    Main Menu   "
        Foreground% = 0: Background% = 7

        CALL POPMENU(Title$, 9, List$(), 2, 0, 7, Foreground%, Background%, "0", 1,
Choice%, RETURN.CODE%)

        SELECT CASE Choice%

            CASE 1
                ClearVar
                InputData ExitCode

            CASE 2
                Caller$ = "edit"
                ClearVar
                InFile ExitCode
                IF ExitCode <> 666 THEN
                   InputData ExitCode
                END IF

            CASE 3
                Caller$ = "geometry"
                FileIn% = 1
                InFile ExitCode
            CASE 4
                Contour

            CASE 5
                PlotCros

            CASE 6
                SCREEN 0
                COLOR 7, 0
                CLS
                RUN "pcstbl3d"

            CASE 7
                ReadCritFile ExitCode
                IF ExitCode <> 666 THEN
                   Caller$ = "3dsurf"
                   Contour
                END IF

            CASE 8
                IF FileIn% <> 1 THEN
                     ERROR 243
                ELSE
                    ReadCritFile ExitCode
                    IF ExitCode <> 666 THEN
                       PlotSurCr
                    END IF
                END IF

            CASE 9

                ITEMS$(1) = " You are about to quit the program "
                ITEMS$(2) = " ??? DO YOU WANT TO DO IT ???"
                ITEMS$(3) = "Press Y to confirm"
                AskWindow 3, ITEMS$(), SELECTION$
                   IF UCASE$(SELECTION$) = "Y" THEN
                   CLOSE
```

```
                COLOR 7, 0
                CLS
                PRINT "Version 2.1 by J.A. Thomas"
                PRINT "Version 2.2 by G. Moshkovich"
                END
             ELSE
               LOCATE 14, 2, 0: PRINT "                              "
             END IF

         CASE ELSE
      END SELECT
   LOOP
END SUB

SUB PlotCros

   Headline
   COLOR 0, 1
   CALL FASTPRT("╔═══════════════════════════════════════════════════════════════════════════╗",
10, 7, 49, RETURN.CODE%)
   CALL FASTPRT("║  Enter the number of the X cross section you want to check.  ║",
11, 7, 49, RETURN.CODE%)
   CALL FASTPRT("║   ( remember you want the 'N' of X(N) ....)                  ║",
12, 7, 49, RETURN.CODE%)
   CALL FASTPRT("║  Enter N:                                                    ║",
13, 7, 49, RETURN.CODE%)
   CALL FASTPRT("╚═══════════════════════════════════════════════════════════════════════════╝",
14, 7, 49, RETURN.CODE%)

   CALL NewGetIn("  ", 0, 2, 13, 18, 10, ncro$, ab$)
   IF ab$ = CHR$(ESC) THEN EXIT SUB
   ncro = VAL(ncro$)


  SCREEN 9
  LOCATE 2, 24: PRINT "This is the cross section of x("; ncro; ")";
  CALL Scale(ncro)

 FOR K = 1 TO ns
   FOR J = 1 TO ny - 1
    LINE (y(J), z(ncro, J, K))-(y(J + 1), z(ncro, J + 1, K)), 12
   NEXT J
 NEXT K

 FOR K = 1 TO ns
  IF utype(K) <> 1 THEN
   FOR J = 1 TO ny - 1
      LINE (y(J), uz(ncro, J, K))-(y(J + 1), uz(ncro, J + 1, K))
13
   NEXT J
  END IF
 NEXT K

' plot the boundary conditions
     FOR J = 1 TO ny
        LINE (y(J), zmin(ncro, J))-(y(J), zmin(ncro, J) + dzmin(ncro, J)), 2
     NEXT J

' plot limits on the main axis
     LeftStart = 0
     RightStart = 0
     FOR J = 1 TO ny
          SELECT CASE y(J)
               CASE yamin TO yamin + dyamin
                    IF LeftStart = 0 THEN
                         LeftStart = 1
                         IndLeftStart = J
                    END IF
                    IndLeftFinish = J
```

```
            CASE yamax TO yamax + dyamax
                 IF RightStart = 0 THEN
                      RightStart = 1
                      IndRightStart = J
                 END IF
                 IndRightFinish = J

        END SELECT
    NEXT J
    'calculate vertical coordinates of limiting points
    ZLeftStart = (z(xaprin, IndLeftStart, 1) - z(xaprin, IndLeftStart - 1, 1)) /
(y(IndLeftStart) - y(IndLeftStart - 1)) * (yamin - y(IndLeftStart - 1)) + z(xaprin,
IndLeftStart - 1, 1)
    ZLeftFinish = (z(xaprin, IndLeftFinish + 1, 1) - z(xaprin, IndLeftFinish, 1)) /
(y(IndLeftFinish + 1) - y(IndLeftFinish)) * (yamin + dyamin - y(IndLeftFinish)) +
z(xaprin, IndLeftFinish, 1)
    ZRightStart = (z(xaprin, IndRightStart, 1) - z(xaprin, IndRightStart - 1, 1)) /
(y(IndRightStart) - y(IndRightStart - 1)) * (yamax - y(IndRightStart - 1)) +
z(xaprin, IndRightStart - 1, 1)
    ZRightFinish = (z(xaprin, IndRightFinish + 1, 1) - z(xaprin, IndRightFinish,
1)) / (y(IndRightFinish + 1) - y(IndRightFinish)) * (yamax + dyamax -
y(IndRightFinish)) + z(xaprin, IndRightFinish, 1)

    'plot lines at left and right boundaries
    LINE (yamin, ZLeftStart)-(yamin, ZLeftStart + 4)
    LINE (yamin + dyamin, ZLeftFinish)-(yamin + dyamin, ZLeftFinish + 4)
    LINE (yamax, ZRightStart)-(yamax, ZRightStart + 4)
    LINE (yamax + dyamax, ZRightFinish)-(yamax + dyamax, ZRightFinish + 4)

 LOCATE 25, 22: PRINT "Press any key to go back to main menu ...";
 SUSPEND$ = INPUT$(1)

END SUB

SUB PlotSurCr

   Headline
   COLOR 0, 1
   CALL FASTPRT("╔═══════════════════════════════════════════════════════════════╗",
10, 7, 49, RETURN.CODE%)
   CALL FASTPRT("║  Enter the number of the X cross section you want to check.   ║",
11, 7, 49, RETURN.CODE%)
   CALL FASTPRT("║   ( remember you want the 'N' of X(N) ....)                   ║",
12, 7, 49, RETURN.CODE%)
   CALL FASTPRT("║  Enter N:                                                     ║",
13, 7, 49, RETURN.CODE%)
   CALL FASTPRT("╚═══════════════════════════════════════════════════════════════╝",
14, 7, 49, RETURN.CODE%)

   CALL NewGetIn("__", 0, 2, 13, 18, 10, ncro$, ab$)
   IF ab$ = CHR$(ESC) THEN EXIT SUB
   ncro = VAL(ncro$)      ' value of cross section

   SCREEN 9

   LOCATE 2, 24: PRINT "This is the cross section of x("; ncro; ")";

   CALL Scale(ncro)

   'WINDOW (y(0), y(0))-(y(ny - 1), y(ny - 1))
   'VIEW (51, 51)-(410, 300), 1, 11

   ' plot the critical surface
   FOR K = 1 TO ny - 1
      LINE (ysur(K), zsur(ncro, K))-(ysur(K + 1), zsur(ncro, K + 1)), 14
   NEXT K

   ' plot the piezometric line
   FOR K = 1 TO ns
```

```
     IF utype(K) <> 1 THEN
     FOR J = 1 TO ny - 1
       LINE (y(J), uz(ncro, J, K))-(y(J + 1), uz(ncro, J + 1, K))
11
     NEXT J
     END IF
   NEXT K

   ' plot the soil profile
   FOR K = 1 TO ns
      FOR J = 1 TO ny - 1
      LINE (y(J), z(ncro, J, K))-(y(J + 1), z(ncro, J + 1, K)), 13
      NEXT J
   NEXT K

   ' plot the boundary conditions
      FOR J = 1 TO ny
         LINE (y(J), zmin(ncro, J))-(y(J), zmin(ncro, J) + dzmin(ncro, J)), 2
      NEXT J

' plot limits on the main axis
     LeftStart = 0
     RightStart = 0
     FOR J = 1 TO ny
          SELECT CASE y(J)
               CASE yamin TO yamin + dyamin
                    IF LeftStart = 0 THEN
                         LeftStart = 1
                         IndLeftStart = J
                    END IF
                    IndLeftFinish = J

               CASE yamax TO yamax + dyamax
                    IF RightStart = 0 THEN
                         RightStart = 1
                         IndRightStart = J
                    END IF
                    IndRightFinish = J

          END SELECT
     NEXT J
     'calculate vertical coordinates of limiting points
     ZLeftStart = (z(xaprin, IndLeftStart, 1) - z(xaprin, IndLeftStart - 1, 1)) /
(y(IndLeftStart) - y(IndLeftStart - 1)) * (yamin - y(IndLeftStart - 1)) + z(xaprin,
IndLeftStart - 1, 1)
     ZLeftFinish = (z(xaprin, IndLeftFinish + 1, 1) - z(xaprin, IndLeftFinish, 1)) /
(y(IndLeftFinish + 1) - y(IndLeftFinish)) * (yamin + dyamin - y(IndLeftFinish)) +
z(xaprin, IndLeftFinish, 1)
     ZRightStart = (z(xaprin, IndRightStart, 1) - z(xaprin, IndRightStart - 1, 1)) /
(y(IndRightStart) - y(IndRightStart - 1)) * (yamax - y(IndRightStart - 1)) +
z(xaprin, IndRightStart - 1, 1)
     ZRightFinish = (z(xaprin, IndRightFinish + 1, 1) - z(xaprin, IndRightFinish,
1)) / (y(IndRightFinish + 1) - y(IndRightFinish)) * (yamax + dyamax -
y(IndRightFinish)) + z(xaprin, IndRightFinish, 1)

     'plot lines at left and right boundaries
     LINE (yamin, ZLeftStart)-(yamin, ZLeftStart + 4)
     LINE (yamin + dyamin, ZLeftFinish)-(yamin + dyamin, ZLeftFinish + 4)
     LINE (yamax, ZRightStart)-(yamax, ZRightStart + 4)
     LINE (yamax + dyamax, ZRightFinish)-(yamax + dyamax, ZRightFinish + 4)

   LOCATE 25, 22: PRINT "Press any key to go back to main menu...";
   SUSPEND$ = INPUT$(1)

END SUB

SUB PrVal (nc, z1(), K, colore)
LOCATE K + 3, 60: COLOR colore: PRINT USING "####.###"; z1(K)
LOCATE K + 3, 70: COLOR colore: PRINT "======"
```

```
END SUB

REM $STATIC
SUB ReadCritFile (ExitCode AS INTEGER)

' This subroutine reads file with most critical surface data

   Footer
   CALL MAKEWIND(2, 3, 18, 78, 2, 11, 1, 1, 0, "", RETURN.CODE%)
   CALL MAKEWIND(4, LCOL - 2, 5, RCOL + 2, 2, 1, 11, NOGROW, NOSHADOW, "",
RETURN.CODE%)

   CALL FASTPRT("Select the name of the file with the 3D surface you want", 4, LCOL,
49, RETURN.CODE%)
   CALL FASTPRT("to be plotted. Use the cursor keys and press <enter>    ", 5, LCOL,
49, RETURN.CODE%)


   DO
       CALL PopDira("*.*", 6, 0, 11, 0, 11, "0", 1, numf%, File$, RETURN.CODE%)
       IF File$ = "" OR INKEY$ = CHR$(ESC) THEN
           ExitCode = 666
           EXIT SUB
       END IF
       OPEN File$ FOR INPUT AS #2
       LINE INPUT #2, Legal$
       IF Legal$ <> " PCSTBL3D v2.0 Critical Surface" THEN
           ERROR 248
           ErrorCode = 666
           CLOSE
       ELSE
           ErrorCode = 999
       END IF
   LOOP UNTIL ErrorCode <> 666

   COLOR 2, 1

   CALL FASTPRT("║  >>> READING INPUT FILE DATA <<<    >>> PLEASE WAIT <<<      ║",
4, 9, 49, RETURN.CODE%)
   CALL FASTPRT("║                                                              ║",
5, 9, 49, RETURN.CODE%)

   INPUT #2, nx, ny

' *** enter X coordinates ***

   FOR J = 1 TO ny
       FOR I = 1 TO nx
           INPUT #2, xsur(I), ysur(J), zsur(I, J)
       NEXT I
   NEXT J

   CLOSE

   CALL FASTPRT("║  >>> FINISHED READING FILE <<<   PLEASE PRESS ANY KEY ! ...  ║",
4, 9, 49, RETURN.CODE%)
   CALL FASTPRT("║                                                              ║",
5, 9, 49, RETURN.CODE%)

   SUSPEND$ = INPUT$(1)
   ClearScrn

END SUB

SUB Scale (ncros)

'    it calculates the values for the automatic scaling----------------

   IF Caller$ = "geometry" THEN
```

```
        ypmin = y(1)
        ypmax = y(ny)
        zpmin = 1000000000#
        zpmax = -1000000000#

    '.....sort for maximum and minimum values of the soil polygonals.....

        FOR I = 1 TO ns
           FOR J = 1 TO ny
               IF zpmax <= z(ncros, J, I) THEN zpmax = z(ncros, J, I)
               IF zpmin >= z(ncros, J, I) THEN zpmin = z(ncros, J, I)
           NEXT J
        NEXT I

    '.....sort also the limits for surface generation.....................

       FOR I = 1 TO nx
           FOR J = 1 TO ny
               IF zpmin > zmin(I, J) THEN zpmin = zmin(I, J)
           NEXT
       NEXT

    ELSE
        ypmin = ysur(1)
        ypmax = ysur(ny)
        zpmin = 1000000000#
        zpmax = -1000000000#

    '.....sort for maximum and minimum values of the soil polygonals.....

           FOR J = 1 TO ny
           IF zpmax <= zsur(ncros, J) THEN zpmax = zsur(ncros, J)
           IF zpmin >= zsur(ncros, J) THEN zpmin = zsur(ncros, J)
           NEXT J

    END IF

'.....calculation of parameters for the graphics window.............

     deltay = zpmax - zpmin
     deltax = ypmax - ypmin
     ymini = ypmin
     ymaxi = ypmax
     zmini = CINT(zpmin - (.74 * deltax - deltay) * .5)
     zmaxi = CINT(zpmax + (.74 * deltax - deltay) * .5)

'.....calling the graphics routines.................................

     'COLOR 14, 1
     'VIEW (53, 20)-(587, 329), 8, 2
      VIEW (86, 40)-(552, 310), 8, 11
      WINDOW (ymini, zmini)-(ymaxi, zmaxi)

      LOCATE 24, 10: PRINT STR$(ymini);
      LOCATE 24, 35: PRINT "Y   A X I S";
      LOCATE 24, 68: PRINT STR$(ymaxi);

      LOCATE 3, 6: PRINT STR$(zmaxi);
      LOCATE 10, 4: PRINT "Z";
      LOCATE 12, 4: PRINT "A";
      LOCATE 13, 4: PRINT "X";
      LOCATE 14, 4: PRINT "I";
      LOCATE 15, 4: PRINT "S";
      LOCATE 23, 6: PRINT STR$(zmini);


END SUB

SUB VecOut (xstart, ystart, xstop, ystop, colore) STATIC
```

```
    LINE (xstart, ystart)-(xstop, ystop), colore
END SUB
```

```
DECLARE SUB NewGetIn (FldContent AS STRING, numonly%, MaxLen%, FldRow%, LeftColumn%,
ColorAttr%, ReturnVar AS STRING, AbortVar AS STRING)
'$INCLUDE: 'CURRENTB.BI'

DATA 0,0,8,0,2,5,7,6,9,0,3,4,1,3,1,4,3,0,9,6,7,5,2,0,8,0,0
END

LocalHandler:
    GlobalHandler
    RESUME NEXT

REM $DYNAMIC
SUB Contour
ON ERROR GOTO LocalHandler
REM input variables to CONREC
REM d(0:iub, 0:jub) 'matrix for the data surface
REM iub,jub         'index bounds of the data array
REM x1(o:iub)        'data array for columns coordinates
REM y1(0:jub)        'data array for row coordinates
REM nc              ' number of contour levels
REM z1(0:nc-1)       'contour levels in increasing order
REM vecout         ' an external subroutine to plot the contour lines
REM false and true Boolean values

CALL Footer

IF Caller$ = "geometry" THEN

   CALL MAKEWIND(2, 3, 18, 78, 2, 11, 1, 0, 0, "", RETURN.CODE%)
   CALL FASTPRT("╔═══════════════════════════════════════════════════════════════╗",
10, 9, 49, RETURN.CODE%)
   CALL FASTPRT("║  Enter the number of the soil layer you want to have the      ║",
11, 9, 49, RETURN.CODE%)
   CALL FASTPRT("║  contours plotted:                                            ║",
12, 9, 49, RETURN.CODE%)
   CALL FASTPRT("║  Soil layer number =     Enter number of contour levels:      ║",
13, 9, 49, RETURN.CODE%)
   CALL FASTPRT("║                                (number of levels <= 14)       ║",
14, 9, 49, RETURN.CODE%)
   CALL FASTPRT("╚═══════════════════════════════════════════════════════════════╝",
15, 9, 49, RETURN.CODE%)

   CALL NewGetIn("..", 0, 2, 13, 32, 10, soil$, ab$)
   IF ab$ = CHR$(ESC) THEN EXIT SUB
   soil = VAL(soil$)
ELSE

   CALL MAKEWIND(2, 3, 18, 78, 2, 11, 1, 0, 0, "", RETURN.CODE%)
   CALL FASTPRT("╔═══════════════════════════════════════════════════════════════╗",
10, 9, 49, RETURN.CODE%)
   CALL FASTPRT("║  You chose to plot the contours of the most critical surface  ║",
11, 9, 49, RETURN.CODE%)
   CALL FASTPRT("║  in your geometry:                                            ║",
12, 9, 49, RETURN.CODE%)
   CALL FASTPRT("║           Now please enter the number of contour levels:      ║",
13, 9, 49, RETURN.CODE%)
   CALL FASTPRT("║                                (number of levels <= 14)       ║",
14, 9, 49, RETURN.CODE%)
   CALL FASTPRT("╚═══════════════════════════════════════════════════════════════╝",
15, 9, 49, RETURN.CODE%)

END IF

loop1:

   CALL NewGetIn("..", 0, 2, 13, 67, 10, nc$, ab$)
   IF ab$ = CHR$(ESC) THEN EXIT SUB
   nc = VAL(nc$)
   IF nc > 14 GOTO loop1
```

```
  RESTORE
  iub = nx - 1: jub = ny - 1
  DIM d(iub + 1, jub + 1), z1(nc)

  IF Caller$ = "geometry" THEN
    xmin = x(1): xmax = x(nx): ymin = y(1): ymax = y(ny)
  ELSE
    xmin = xsur(1): xmax = xsur(nx): ymin = ysur(1): ymax = ysur(ny)
  END IF

  SCREEN 9
      'SCALE THE FIGURE
      deltay = ymax - ymin
      deltax = xmax - xmin
      xmini = xmin
      xmaxi = xmax
      ymini = CINT(ymin - (.89 * deltax - deltay) * .5)
      ymaxi = CINT(ymax + (.89 * deltax - deltay) * .5)
      WINDOW (xmini, ymini)-(xmaxi, ymaxi)
      VIEW (51, 51)-(410, 300), 0, 11

  LOCATE 23, 6: PRINT STR$(xmin);
  LOCATE 24, 25: PRINT "X  AXIS";
  LOCATE 23, 50: PRINT STR$(xmax);
  LOCATE 4, 2: PRINT STR$(ymaxi);
  LOCATE 10, 2: PRINT "Y"; : LOCATE 12, 2: PRINT "A";
  LOCATE 13, 2: PRINT "X";
  LOCATE 14, 2: PRINT "I";
  LOCATE 15, 2: PRINT "S";
  LOCATE 22, 2: PRINT STR$(ymini);

 dmin = 1000000000#
 dmax = -10000000000#

' ******* format data for geometry plot ******

IF Caller$ = "geometry" THEN

   FOR I = 1 TO nx
     FOR J = 1 TO ny
       x1(I) = x(I)
       y1(J) = y(J)
       d(I, J) = z(I, J, soil)
       IF d(I, J) <= dmin THEN dmin = d(I, J)
       IF d(I, J) >= dmax THEN dmax = d(I, J)
     NEXT J
   NEXT I

ELSEIF Caller$ = "3dsurf" THEN

   FOR I = 1 TO nx
     FOR J = 1 TO ny
      x1(I) = xsur(I)
      y1(I) = ysur(I)
      d(I, J) = zsur(I, J)
      IF d(I, J) <= dmin THEN dmin = d(I, J)
      IF d(I, J) >= dmax THEN dmax = d(I, J)
     NEXT J
   NEXT I

END IF

  LOCATE 2, 60: PRINT "CONTOUR LEVELS"
  FOR I = 1 TO nc
    z1(I) = dmin + I * (dmax - dmin) / nc
    CALL PrVal(nc, z1(), I, I)
  NEXT I
```

```
' ****** Select the palette of colors to be used on the contours *****

    PALETTE 8, 11: PALETTE 7, 5: PALETTE 6, 13: PALETTE 10, 3
    PALETTE 5, 25: PALETTE 4, 9: PALETTE 3, 17: PALETTE 2, 1
    PALETTE 1, 8: PALETTE 9, 15: PALETTE 11, 19: PALETTE 12, 44
    PALETTE 13, 46: PALETTE 14, 55

GOSUB conrec
COLOR 7, 0
LOCATE 2, 9: PRINT "Press any key to go back to main menu ..."
SUSPEND$ = INPUT$(1)
EXIT SUB
END

' ---------------------------------------------------------------
conrec:

' local declarations for conrec
DIM h(5)     'relative heights of the box above contour
DIM ish(5)   'sign of h()
DIM xh(5)    'x coordinate of box
DIM yh(5)    'y coordinate of box
DIM im(4)    'maping from vertex numbers to x offsets
DIM castab(3, 3, 3)  'case switch table
DIM jm(4)    'maping from vertex numbers to offsets

im(1) = 0: im(2) = 1: im(3) = 1: im(4) = 0
jm(1) = 0: jm(2) = 0: jm(3) = 1: jm(4) = 1

FOR K% = 1 TO 3
 FOR J% = 1 TO 3
  FOR I% = 1 TO 3
   READ castab(K%, J%, I%)
  NEXT I%
 NEXT J%
NEXT K%

'CHECK THE INPUT PARAMETERS FOR VALIDITY

prmerr = FALSE
IF (iub <= 1 OR jub <= 1) THEN prmerr = TRUE
IF (nc <= 1) THEN prmerr = TRUE

FOR K = 2 TO nc
  IF (z1(K) <= z1(K - 1)) THEN prmerr = TRUE
NEXT K

IF (prmerr) THEN msg$ = " Error in input parameters ": RETURN

' SCAN THE ARRAY, TOP DOWN, LEFT TO RIGHT

FOR J = jub TO 1 STEP -1
FOR I = 1 TO iub

' find lowest vertex
  IF (d(I, J) < d(I, J + 1)) THEN dmin = d(I, J) ELSE dmin = d(I, J + 1)
  IF (d(I + 1, J) < dmin) THEN dmin = d(I + 1, J)
  IF (d(I + 1, J + 1) < dmin) THEN dmin = d(I + 1, J + 1)

' find highest vertex
  IF (d(I, J) > d(I, J + 1)) THEN dmax = d(I, J) ELSE dmax = d(I, J + 1)
  IF (d(I + 1, J) > dmax) THEN dmax = d(I + 1, J)
  IF (d(I + 1, J + 1) > dmax) THEN dmax = d(I + 1, J + 1)
  IF (dmax < z1(1) OR dmin > z1(nc)) THEN GOTO noneinbox

' DRAW EACH CONTOUR WITHIN THIS BOX

FOR K = 1 TO nc
IF (z1(K) < dmin OR z1(K) > dmax) THEN GOTO noneintri
```

```
FOR M = 5 TO 1 STEP -1

  IF M > 1 THEN
    h(M) = d(I + im(M - 1), J + jm(M - 1)) - z1(K)
    xh(M) = x1(I + im(M - 1))
    yh(M) = y1(J + jm(M - 1))
  END IF

  IF M = 1 THEN
    h(1) = (h(2) + h(3) + h(4) + h(5)) / 4
    xh(1) = (x1(I) + x1(I + 1)) / 2
    yh(1) = (y1(J) + y1(J + 1)) / 2
  END IF

  IF h(M) > 0 THEN
    ish(M) = 3
  ELSEIF (h(M) < 0) THEN
    ish(M) = 1
  ELSE
    ish(M) = 2
  END IF

NEXT M

' SCAN EACH TRIANGLE IN THE BOX

FOR M = 2 TO 5
 m1 = M: m2 = 1: m3 = M + 1
 IF m3 = 6 THEN m3 = 2
  casa = CINT(castab(ish(m1), ish(m2), ish(m3)))
  IF casa = 0 THEN GOTO case0
  ON casa GOTO case1, case2, case3, case4, case5, case6, case7, case8, case9

'line between vertices m1 and m2
case1:
    x1 = xh(m1): y1 = yh(m1): x2 = xh(m2): y2 = yh(m2)
    GOTO drawit
case2:
    x1 = xh(m2): y1 = yh(m2): x2 = xh(m3): y2 = yh(m3)
    GOTO drawit
case3:
    x1 = xh(m3): y1 = yh(m3): x2 = xh(m1): y2 = yh(m1)
    GOTO drawit
case4:
    x1 = xh(m1): y1 = yh(m1)
    x2 = (h(m3) * xh(m2) - h(m2) * xh(m3)) / (h(m3) - h(m2))
    y2 = (h(m3) * yh(m2) - h(m2) * yh(m3)) / (h(m3) - h(m2))
    GOTO drawit
case5:
    x1 = xh(m2): y1 = yh(m2)
    x2 = (h(m1) * xh(m3) - h(m3) * xh(m1)) / (h(m1) - h(m3))
    y2 = (h(m1) * yh(m3) - h(m3) * yh(m1)) / (h(m1) - h(m3))
    GOTO drawit
case6:
    x1 = xh(m3): y1 = yh(m3)
    x2 = (h(m2) * xh(m1) - h(m1) * xh(m2)) / (h(m2) - h(m1))
    y2 = (h(m2) * yh(m1) - h(m1) * yh(m2)) / (h(m2) - h(m1))
    GOTO drawit
case7:
    x1 = (h(m2) * xh(m1) - h(m1) * xh(m2)) / (h(m2) - h(m1))
    y1 = (h(m2) * yh(m1) - h(m1) * yh(m2)) / (h(m2) - h(m1))
    x2 = (h(m3) * xh(m2) - h(m2) * xh(m3)) / (h(m3) - h(m2))
    y2 = (h(m3) * yh(m2) - h(m2) * yh(m3)) / (h(m3) - h(m2))
    GOTO drawit
case8:
    x1 = (h(m3) * xh(m2) - h(m2) * xh(m3)) / (h(m3) - h(m2))
    y1 = (h(m3) * yh(m2) - h(m2) * yh(m3)) / (h(m3) - h(m2))
    x2 = (h(m1) * xh(m3) - h(m3) * xh(m1)) / (h(m1) - h(m3))
    y2 = (h(m1) * yh(m3) - h(m3) * yh(m1)) / (h(m1) - h(m3))
```

```
    GOTO drawit
case9:
    x1 = (h(m1) * xh(m3) - h(m3) * xh(m1)) / (h(m1) - h(m3))
    y1 = (h(m1) * yh(m3) - h(m3) * yh(m1)) / (h(m1) - h(m3))
    x2 = (h(m2) * xh(m1) - h(m1) * xh(m2)) / (h(m2) - h(m1))
    y2 = (h(m2) * yh(m1) - h(m1) * yh(m2)) / (h(m2) - h(m1))
    GOTO drawit
drawit:
    CALL VecOut(x1, y1, x2, y2, K)
case0:
  NEXT M

noneintri:
  NEXT K

noneinbox:
  NEXT I
  NEXT J
RETURN


END SUB
```

```
'$INCLUDE: 'CURRENTB.BI'

REM $DYNAMIC
SUB GlobalHandler
SELECT CASE ERR

'   CASE 5
'      SCREEN 0, 1, 0, 0
'      COLOR 7, 0
'      CLS
'      PRINT "Memory overflow. Reboot system or check hardware configuration"
'      BEEP
'      END

   CASE 243
        TextLine$(1) = "You must read in data file first"
        ErrWindow 1, TextLine$(), 243
   CASE 244
        TextLine$(1) = "The first point of surface generation limits"
        TextLine$(2) = "is beyond the specified slope"
        ErrWindow 2, TextLine$(), 244
   CASE 245
        TextLine$(1) = "The limits of termination of surface generation"
        TextLine$(2) = "exceed slope boundaries in Y direction"
        ErrWindow 2, TextLine$(), 245
   CASE 246
        TextLine$(1) = "The upper boundary of the generated sliding surface"
        TextLine$(2) = "can not be above the soil surface"
        TextLine$(3) = "Please, reenter vertical constraints"
        ErrWindow 3, TextLine$(), 246

   CASE 247
      TextLine$(1) = "Unexpected program error. Please contact costumer support"
      TextLine$(2) = "Please press a key to continue"
      ErrWindow 2, TextLine$(), 247

   CASE 248
      TextLine$(1) = "This file is not a PCSTBL3D critical surface file"
      TextLine$(2) = "Please press any key to continue"
      ErrWindow 2, TextLine$(), 248

   CASE 249
      TextLine$(1) = "This file is not a PCSTBL3D data file"
      TextLine$(2) = "Please press any key to continue"
      ErrWindow 2, TextLine$(), 249

   CASE 250
      TextLine$(1) = "Valid porepressure model types are 1 or 2 only"
      TextLine$(2) = "Please press a key to continue"
      ErrWindow 2, TextLine$(), 250

   CASE 251
      TextLine$(1) = "Maximum number of data points"
      TextLine$(2) = "in Y direction is limited to " + STR$(MAXCOORD)
      ErrWindow 2, TextLine$(), 251

   CASE 252
      TextLine$(1) = "Maximum number of data points"
      TextLine$(2) = "in X direction is limited to " + STR$(MAXCOORD)
      ErrWindow 2, TextLine$(), 252

   CASE 253
      TextLine$(1) = "Maximum number of soils"
      TextLine$(2) = "is limited to " + STR$(MAXSOIL)
      ErrWindow 2, TextLine$(), 253

   CASE 254
      TextLine$(1) = "Input number contains invalid character"
      TextLine$(2) = "Please press a key to continue"
```

```
      ErrWindow 2, TextLine$(), 254

   CASE 255
      TextLine$(1) = "Invalid file name"
      TextLine$(2) = "Please press a key to continue"
      ErrWindow 2, TextLine$(), 255

   CASE ELSE
      TextLine$(1) = "Fatal runtime error. Please contact costumer support"
      TextLine$(2) = "Press a key to continue"
      ErrWindow 2, TextLine$(), ERR

END SELECT

END SUB
```

```
DECLARE FUNCTION ASCRight% (Arg$)
'$INCLUDE: 'CURRENTB.BI'

LocalHandler:
GlobalHandler
RESUME NEXT

REM $DYNAMIC
DEFINT A-Z
FUNCTION ASCRight (Arg$)
'Function AscRight returns ASCII code of the right character of a string

   ASCRight = ASC(RIGHT$(Arg$, 1))

END FUNCTION

DEFSNG A-Z
SUB CapsCheck (Eflag%) STATIC
'returns spaces if not on, letters if on

   DEF SEG = 0
   CAP$ = "    "
   NIM$ = "   "
   IF Eflag% = FALSE THEN IKE$ = "   "
   IF Eflag% = TRUE THEN IKE$ = "INS"
   IF PEEK(&H417) AND 64 THEN CAP$ = "CAPS"
   IF PEEK(&H418) AND 64 THEN CAP$ = "    "
   IF PEEK(&H417) AND 32 THEN NIM$ = "NUM"
   IF PEEK(&H418) AND 32 THEN NIM$ = "   "
   IF (PEEK(&H417) AND 2) OR (PEEK(&H417) AND 1) THEN CAP$ = "CAPS"
   IF (PEEK(&H418) AND 2) OR (PEEK(&H418) AND 1) THEN CAP$ = "    "
   CALL FASTPRT(IKE$ + " " + NIM$ + " " + CAP$, 2, 56, 112, RETURN.CODE%)

END SUB

DEFINT A-Z
SUB NewGetIn (FldContent AS STRING, numonly, MaxLen, FldRow, LeftColumn, ColorAttr,
ReturnVar AS STRING, AbortVar AS STRING) STATIC

'Author:    G. Moshkovich
'Created:   9/90
'Bugs:
'-------------------------------------------------------------------------
'Purpose:
'
'Subroutine NewGetIn creates input field at the specified location, with
'the specified color and reads string input from this field.
'It has the same parameters format as the subroutine GetIn, written
'by J. Thomaz, the difference is the enhaced string editing options and
'extended variety of the abort variable values.
'
'-------------------------------------------------------------------------
'Parameters:
'  Input:
'FldContent    Initial content of the input field (shows periods if none)
'NumOnly       1 if numeric input field othervise 0
'MaxLen        Maximum length of the input field
'FldRow        Row where the input field is located
'LeftColumn    Left column of the input field
'ColorAtt      Color attribute of the input field
'
'  Output:
'ReturnVar     Return string
'AbortVar      Variable returning the ASCII code of the abort character
'-------------------------------------------------------------------------
'Externals:
'
'CapsCheck
'FastPrt
```

```
'ASCRight
'-------------------------------------------------------------------------
'Code begins:
'-------------------------------------------------------------------------

AbortVar = ""
FldColumn = LeftColumn
Tmp$ = FldContent
InsFlag = FALSE

IF FldContent = "" THEN
   CALL FASTPRT(STRING$(MaxLen, CHR$(PER)), FldRow, FldColumn, ColorAttr,
RETURN.CODE%)
ELSE
   CALL FASTPRT(SPACE$(MaxLen), FldRow, FldColumn, ColorAttr, RETURN.CODE%)
   CALL FASTPRT(Tmp$, FldRow, FldColumn, ColorAttr, RETURN.CODE%)
END IF

LOCATE FldRow, FldColumn, 1, 6, 7
   DO
      DO
         CapsCheck InsFlag
         K$ = INKEY$
      LOOP WHILE K$ = ""

      IF (LEFT$(K$, 1) <> CHR$(0)) AND (ASCRight(K$) >= 32) AND (ASCRight(K$) <=
126) THEN

         IF (numonly <> FALSE) AND ((ASCRight(K$) <> 46) AND ((ASCRight(K$) < 48) OR
(ASCRight(K$)) > 57)) THEN
               BEEP

         ELSEIF ((FldColumn < LeftColumn + MaxLen) AND (LEN(Tmp$) < MaxLen)) AND
(InsFlag = FALSE) THEN
            Tmp$ = LEFT$(Tmp$, FldColumn - LeftColumn) + K$ + RIGHT$(Tmp$, LEN(Tmp$)
- (FldColumn - LeftColumn))
            CALL FASTPRT(Tmp$, FldRow, LeftColumn, ColorAttr, RETURN.CODE%)
            IF (FldColumn < LeftColumn + MaxLen - 1) THEN
               FldColumn = FldColumn + 1
            END IF

         ELSEIF (FldColumn < LeftColumn + MaxLen) AND (InsFlag = TRUE) THEN
            Tmp$ = LEFT$(Tmp$, FldColumn - LeftColumn) + K$ + RIGHT$(Tmp$, LEN(Tmp$)
- (FldColumn - LeftColumn) - 1)
            CALL FASTPRT(Tmp$, FldRow, LeftColumn, ColorAttr, RETURN.CODE%)
            IF (FldColumn < LeftColumn + MaxLen - 1) THEN
               FldColumn = FldColumn + 1
            END IF

         ELSE
            SOUND 600, 2
         END IF

         LOCATE FldRow, FldColumn, 1

      ELSE
         Ky = ASCRight(K$)

         SELECT CASE Ky

            CASE LEFT
               IF FldColumn > LeftColumn THEN
                  FldColumn = FldColumn - 1
                  LOCATE FldRow, FldColumn, 1
               ELSE
                  SOUND 600, 2
               END IF

            CASE RIGHT
```

```
               IF FldColumn < LeftColumn + MaxLen - 1 THEN
                  IF (FldColumn - LeftColumn + 1) <= LEN(Tmp$) THEN
                     FldColumn = FldColumn + 1
                     LOCATE FldRow, FldColumn, 1
                  END IF
               ELSE
                  SOUND 600, 2
               END IF

            CASE DEL, BKSP
               IF (Ky = DEL) AND (FldColumn - LeftColumn < LEN(Tmp$)) THEN
                  Tmp$ = LEFT$(Tmp$, FldColumn - LeftColumn) + RIGHT$(Tmp$,
LEN(Tmp$) - (FldColumn - LeftColumn) - 1)
               ELSEIF (Ky = BKSP) AND (FldColumn > LeftColumn) THEN
                  Tmp$ = LEFT$(Tmp$, FldColumn - LeftColumn - 1) + RIGHT$(Tmp$,
LEN(Tmp$) - (FldColumn - LeftColumn))
                  FldColumn = FldColumn - 1
               END IF

               CALL FASTPRT(Tmp$ + SPACE$(MaxLen - LEN(Tmp$)), FldRow, LeftColumn,
ColorAttr, RETURN.CODE%)
               LOCATE FldRow, FldColumn, 1

            CASE INS
               IF InsFlag = TRUE THEN
                  LOCATE FldRow, FldColumn, 1, 6, 7
                  InsFlag = FALSE
               ELSEIF InsFlag = FALSE THEN
                  LOCATE FldRow, FldColumn, 1, 0, 7
                  InsFlag = TRUE
               END IF

            CASE HOME
               FldColumn = LeftColumn
               LOCATE FldRow, FldColumn, 1

            CASE ENDK
               IF LEN(Tmp$) < MaxLen THEN
                  FldColumn = LeftColumn + LEN(Tmp$)
               ELSE
                  FldColumn = LeftColumn + LEN(Tmp$) - 1
               END IF
               LOCATE FldRow, FldColumn, 1

            CASE ENTER, F2
               ReturnVar = Tmp$
               EXIT SUB

            CASE DOWN, UP, PGDN, PGUP
               AbortVar = CHR$(Ky)
               EXIT SUB

            CASE ESC
               AbortVar = CHR$(ESC)
               EXIT SUB

            CASE ELSE
               SOUND 600, 2

         END SELECT
      END IF
   LOOP UNTIL Ky = 3
END SUB

DEFSNG A-Z
SUB SoundBeep STATIC
     SOUND 1000, 1: SOUND 1500, 2: SOUND 500, 1
END SUB
```

```
SUB Strip (rax$, clean$) STATIC
   FOR SS = 1 TO LEN(rax$)

      IF MID$(rax$, SS, 2) = "   " THEN
         rax$ = LEFT$(rax$, SS - 1)
         EXIT FOR
      END IF
   NEXT SS
   clean$ = rax$
END SUB
```

```
DECLARE FUNCTION LJustStr$ (Arg!)
DECLARE SUB NewGetIn (FldContent AS STRING, numonly%, MaxLen%, FldRow%, LeftColumn%,
ColorAttr%, ReturnVar AS STRING, AbortVar AS STRING)
DECLARE SUB Edit (FldContent AS STRING, numonly%, MaxLen%, FldRow%, LeftColumn%,
ColorAttr%, ReturnVar AS STRING, AbortVar AS STRING)
'$INCLUDE: 'CURRENTB.BI'

END

LocalHandler:
GlobalHandler
RESUME NEXT

REM $DYNAMIC
SUB AskWindow (NLines AS INTEGER, TextLine() AS STRING, KeyPressed AS STRING)

   SCREEN 0, 1, 0, 0
   COLOR 0, 7

   PCOPY 0, 4
   '-------------------------------------------------------------------------
   'MAKEWIND (ULR%, ULC%, LRR%, LRC%, FRAME%, FORE%, BACK%, GROW%, SHADOW%, LABEL$)
   '-------------------------------------------------------------------------
    MaxLine$ = TextLine(1)
    FOR I = 1 TO NLines
        IF LEN(TextLine(I)) > LEN(MaxLine$) THEN
            MaxLine$ = TextLine(I)
            MaxInd = I
        END IF
    NEXT

   IF (NLines MOD 2 = 0) THEN
       LROW% = 12 + CINT(NLines / 2)
   ELSE
       LROW% = 11 + CINT(NLines / 2)
   END IF
   UROW% = 13 - CINT(NLines / 2)
   ULC% = 38 - LEN(MaxLine$) / 2
   LRC% = 41 + LEN(MaxLine$) / 2

   CALL MAKEWIND(UROW%, ULC%, LROW%, LRC%, 2, 4, 7, 0, TRUE, "", RETURN.CODE%)

   FOR I = 1 TO NLines
       LOCATE 12 - CINT(NLines / 2) + I, CINT(40 - LEN(TextLine(I)) / 2), 0
       PRINT TextLine(I);
   NEXT I

   KeyPressed = INPUT$(1)
   PCOPY 4, 0

   SCREEN 0, 1, 0, 0

END SUB

SUB ClearVar

   '------------------------reinitialize variables-------------------------
   Nam$ = ""
   nx = 0: ny = 0: ns = 0
   ERASE x, y, z
   xaprin = 0: yamin = 0: dyamin = 0: yamax = 0: dyamax = 0
   ERASE xmin1, dxmin1, xmin2, dxmin2
   ERASE zmin, dzmin
   ERASE Gama, C, Fi
   ERASE utype, ru, uz

END SUB

SUB ErrWindow (NLines AS INTEGER, TextLine() AS STRING, ErrCode AS INTEGER)
```

```
   SCREEN 0, 1, 0, 0
   COLOR 0, 7
   SoundBeep

   PCOPY 0, 4
'-----------------------------------------------------------------------
'MAKEWIND (ULR%, ULC%, LRR%, LRC%, FRAME%, FORE%, BACK%, GROW%, SHADOW%, LABEL$)
'-----------------------------------------------------------------------
    MaxLine$ = TextLine(1)
    FOR I = 1 TO NLines
        IF LEN(TextLine(I)) > LEN(MaxLine$) THEN
            MaxLine$ = TextLine(I)
            MaxInd = I
        END IF
    NEXT

   ULC% = 38 - LEN(MaxLine$) / 2
   LRC% = 41 + LEN(MaxLine$) / 2
   IF NLines MOD 2 = 0 THEN
       UROW% = 13 - NLines \ 2
       LROW% = 12 + NLines \ 2
   ELSEIF NLines = 1 THEN
       UROW% = 13 - NLines \ 2
       LROW% = 12 + NLines \ 2 + 1
   ELSE
       UROW% = 13 - NLines \ 2 - 1
       LROW% = 12 + NLines \ 2
   END IF


   CALL MAKEWIND(UROW%, ULC%, LROW%, LRC%, 2, 4, 7, 0, SHADOW, "ERROR " +
STR$(ErrCode), RETURN.CODE%)

   FOR I = 1 TO NLines
       LOCATE 12 - CINT(NLines / 2) + I, CINT(40 - LEN(TextLine(I)) / 2), 0
       PRINT TextLine(I);
   NEXT I

   DO: LOOP WHILE INKEY$ = ""
   PCOPY 4, 0

END SUB

FUNCTION Filter$ (Txt$, FilterString$, Key$) STATIC
   Temp$ = ""
   TxtLength = LEN(Txt$)

   FOR I = 1 TO TxtLength           'Isolate each character in
      C$ = MID$(Txt$, I, 1)         'the string

      IF Key$ = "N" THEN
         'If the character is _not_ in the filter string, save it:
         IF INSTR(FilterString$, C$) = 0 THEN
            Temp$ = Temp$ + C$
         END IF
      ELSEIF Key$ = "Y" THEN
         'If the character _is_ in the filter string, save it:
         IF INSTR(FilterString$, C$) <> 0 THEN
            Temp$ = Temp$ + C$
         END IF
      END IF
   NEXT I

   Filter$ = Temp$
END FUNCTION

SUB InputData (ExitCode AS INTEGER)

   ON ERROR GOTO LocalHandler
```

```
KEY(15) ON
KEY(16) ON

ExitCode = 0
Footer                              'Write a footer

'------------------------------------------------------------------------
'-----------------------Start main input loop----------------------------
'------------------------------------------------------------------------
DO
   SELECT CASE ExitCode

      CASE 0, 1
         '-----------------------------------------------------------------
         'Open data file
         OpenDataFile ExitCode
         IF ExitCode = 666 THEN
               EXIT DO
         ELSE
            ExitCode = 10
         END IF

      CASE 10, 11
         '-----------------------------------------------------------------
         ' Input number of points in x and y direction, and number of soils
         NumOfGridPoints ExitCode
         IF ExitCode = 666 THEN
            ExitCode = 1
         ELSE
            ExitCode = 20
         END IF

      CASE 20, 22
         '-----------------------------------------------------------------
         ' Input coordinats  X and Y   of points
         XYCoord ExitCode
         IF ExitCode = 666 THEN
            ExitCode = 11
         ELSE
            ExitCode = 30
         END IF

      CASE 30, 33
         '-----------------------------------------------------------------
         ' Input coordinates Z of the soil layers for each XY pair
         SoilCoord ExitCode
         IF ExitCode = 666 THEN
            ExitCode = 22
         ELSE
            ExitCode = 40
         END IF

      CASE 40, 44
         '-----------------------------------------------------------------
         'Input surface generation data: main axis number N, and
         'initiation and termination limits along the main axis
         SurfGenerDatal ExitCode
         IF ExitCode = 666 THEN
            ExitCode = 33
         ELSE
            ExitCode = 50
         END IF

      CASE 50, 55
         '-----------------------------------------------------------------
         'Input surface generation data:  left and right initiation values
         'on the axis parallel to main
         SurfGenerData2 ExitCode
         IF ExitCode = 666 THEN
```

```
            ExitCode = 44
         ELSE
            ExitCode = 60
         END IF

      CASE 60, 66
         '-----------------------------------------------------------------
         'Input searching constraints in vertical direction
         VerticConstr ExitCode
         IF ExitCode = 666 THEN
            ExitCode = 55
         ELSE
            ExitCode = 70
         END IF

      CASE 70, 77
         '-----------------------------------------------------------------
         'Input Soil properties data: unit weight, cohesion and shear
         'angle for each soil.
         SoilPropData ExitCode
         IF ExitCode = 666 THEN
            ExitCode = 66
         ELSE
            ExitCode = 80
         END IF

      CASE 80, 88
         '-----------------------------------------------------------------
         'Input pore pressure data
         PorePresData ExitCode
         IF ExitCode = 666 THEN
            ExitCode = 77
         ELSE
            ExitCode = 90
         END IF

      CASE 90
         '-----------------------------------------------------------------
         'Print data to the file
         PrintData ExitCode
         IF ExitCode = 666 THEN
            ExitCode = 88
         ELSE
            ExitCode = 100
         END IF

      CASE ELSE
         ExitCode = 100
   END SELECT
LOOP UNTIL ExitCode = 100

IF ExitCode <> 666 THEN

   TextLine$(1) = "Would you like to check geometry"
   TextLine$(2) = "of the data file you just edited ?  y/[n]"
   AskWindow 2, TextLine$(), KeyPressed$
   IF KeyPressed$ = "y" OR KeyPressed$ = "Y" THEN
      Caller$ = "geometry"
      Contour
   END IF
END IF
ClearScrn
KEY(5) OFF

END SUB

FUNCTION LJustStr$ (Arg) STATIC
'This function converts numeric argument into the left justified string
```

```
   LJustStr$ = LTRIM$(STR$(Arg))

END FUNCTION

SUB NotifyWindow (Line1 AS STRING, Line2 AS STRING)
   SCREEN 0, 1, 0, 0
   COLOR 0, 7

   '-------------------------------------------------------------------------
   'MAKEWIND (ULR%, ULC%, LRR%, LRC%, FRAME%, FORE%, BACK%, GROW%, SHADOW%, LABEL$)
   '-------------------------------------------------------------------------
   IF LEN(Line1) > LEN(Line2) THEN
      ULC% = 38 - LEN(Line1) / 2
      LRC% = 41 + LEN(Line1) / 2
   ELSE
      ULC% = 38 - LEN(Line2) / 2
      LRC% = 41 + LEN(Line2) / 2
   END IF

   CALL MAKEWIND(10, ULC%, 11, LRC%, 2, 4, 7, 0, TRUE, "", RETURN.CODE%)
   COLOR 16, 7
   LOCATE 10, 40 - LEN(Line1) / 2, 0: PRINT Line1
   LOCATE 11, 40 - LEN(Line2) / 2, 0: PRINT Line2;
'  DO: LOOP WHILE INKEY$ = ""
   COLOR 0, 7

END SUB

SUB NumOfGridPoints (ExitCode AS INTEGER)

   SHARED nx, ny, ns

   'This subroutine inputs number of points in X and Y direction and
   'number of soil layers

   PCOPY 0, 1

   CALL MAKEWIND(5, LCOL - 2, 12, RCOL + 2, 2, 1, 11, GROW, SHADOW, "",
RETURN.CODE%)

   CALL FASTPRT("You will be entering the grid of X and Y points next.", 5, LCOL,
49, RETURN.CODE%)
   CALL FASTPRT("This grid will be used to represent the soil profile.", 6, LCOL,
49, RETURN.CODE%)
   CALL FASTPRT("                                                      ", 7, LCOL,
49, RETURN.CODE%)
   CALL FASTPRT("Please enter:  Number of points in X direction:       ", 8, LCOL,
49, RETURN.CODE%)
   CALL FASTPRT("               Number of points in Y direction:       ", 9, LCOL,
49, RETURN.CODE%)
   CALL FASTPRT("               Maximum number of Soils:               ", 10, LCOL,
49, RETURN.CODE%)
   CALL FASTPRT("                                                      ", 11, LCOL,
49, RETURN.CODE%)
   CALL FASTPRT("(Remember that the slide occurs in the Y direction)   ", 12, LCOL,
49, RETURN.CODE%)

   CALL FASTPRT(LJustStr$(nx) + SPACE$(3 - LEN(LJustStr$(nx))), 8, 60, 10,
RETURN.CODE%)
   CALL FASTPRT(LJustStr$(ny) + SPACE$(3 - LEN(LJustStr$(ny))), 9, 60, 10,
RETURN.CODE%)
   CALL FASTPRT(LJustStr$(ns) + SPACE$(3 - LEN(LJustStr$(ns))), 10, 53, 10,
RETURN.CODE%)

   DO
      SELECT CASE ExitCode

         CASE 10
           ' 'Input number of points in X direction
```

```
            NewGetIn LJustStr$(nx), 1, 3, 8, 60, 10, nx$, ab$
            IF ab$ = CHR$(ESC) THEN
               ExitCode = 666          '666-"Devils" exitcode
               PCOPY 1, 0
               EXIT SUB
            ELSEIF VAL(nx$) > MAXCOORD THEN
               ERROR 252
            ELSE
               nx = VAL(nx$)
               ExitCode = 900
            END IF

         CASE 900
            'Input number of points in Y direction----------------------
            NewGetIn LJustStr$(ny), 1, 3, 9, 60, 10, ny$, ab$
            IF ab$ = CHR$(ESC) THEN
               CALL FASTPRT(LJustStr$(ny) + SPACE$(1), 9, 60, 10, RETURN.CODE%)
               ExitCode = 10
            ELSEIF VAL(ny$) > MAXCOORD THEN
               ERROR 251
            ELSE
               ny = VAL(ny$)
               ExitCode = 11
            END IF

         CASE 11
            'Input number of soils -------------------------------------
            NewGetIn LJustStr$(ns), 1, 3, 10, 53, 10, ns$, ab$
            IF ab$ = CHR$(ESC) THEN
               CALL FASTPRT(LJustStr$(ns) + SPACE$(1), 10, 53, 10, RETURN.CODE%)
               ExitCode = 900
            ELSEIF (Filter(ns$, "1234567890.", "N") <> "") OR (VAL(ns$) = 0) THEN
               ERROR 254
               ns$ = ""
            ELSEIF VAL(ns$) > MAXSOIL THEN
               ERROR 253
            ELSE
               ns = VAL(ns$)
               ExitCode = 901
            END IF

         CASE ELSE
            'Just in case..---------------------------------------------
            ERROR 247
            ExitCode = 666
            PCOPY 1, 0
            EXIT SUB

      END SELECT
   LOOP UNTIL ExitCode = 901
   PCOPY 1, 0
END SUB

SUB OpenDataFile (ExitCode AS INTEGER)

   '-------------------------------------------------------------------------
   'This subroutine opens data file and returns ExitCode=666 if ESC was
   'pressed or returns ExitCode=0 as a result of succesfull finishing
   '-------------------------------------------------------------------------

   CALL MAKEWIND(2, 3, 18, 78, 2, 11, 1, 0, FALSE, "", RETURN.CODE%)
   ShowMes$ = "Press CNTRL-END to suspend edition"
   CALL FASTPRT(ShowMes$, 18, 22, 49, RETURN.CODE%)

   ' Input filename

   PCOPY 0, 1
   CALL MAKEWIND(5, LCOL - 2, 9, RCOL + 2, 2, 1, 11, GROW, SHADOW, "", RETURN.CODE%)
```

```
   CALL FASTPRT("Enter a Name for your Data File:                          ", 5,
LCOL, 49, RETURN.CODE%)
   CALL FASTPRT("                                                         ", 6,
LCOL, 49, RETURN.CODE%)
   CALL FASTPRT("Your data will be written to this file.                  ", 7,
LCOL, 49, RETURN.CODE%)
   CALL FASTPRT("If a File with the same name already exists, it will be  ", 8,
LCOL, 49, RETURN.CODE%)
   CALL FASTPRT("overwritten, so please make sure you use an original name!", 9,
LCOL, 49, RETURN.CODE%)

   DO
      NewGetIn Nam$, 0, 12, 5, 45, 10, TMPNam$, ab$

      IF ab$ = CHR$(ESC) THEN

         TextLine$(1) = "Your changes will be lost if you exit edit mode"
         TextLine$(2) = "Please press 'y' to confirm this operation"
         TextLine$(3) = "Press any other key to continue editing"
         AskWindow 3, TextLine$(), KeyPressed$

         IF UCASE$(KeyPressed$) = "Y" THEN
            ExitCode = 666
            EXIT SUB
         END IF

      ELSEIF Filter$(TMPNam$, " ", "N") = "" THEN
         ERROR 255
         ExitCode = 667
         TMPNam$ = ""
      ELSE
         ExitCode = 999
         Nam$ = UCASE$(Filter$(TMPNam$, " ", "N"))
      END IF
   LOOP UNTIL ExitCode = 999

   PCOPY 1, 0

END SUB

SUB PiezoLine (ExitCode AS INTEGER, K)
   ExitCode = 903
   I = 1                                  'initilize variables
   J = 1

   PCOPY 0, 1
   CALL MAKEWIND(5, LCOL - 2, 14, RCOL + 2, 2, 1, 11, GROW, SHADOW, "",
RETURN.CODE%)

   CALL FASTPRT("PORE PRESSURE DATA - Piezometric Line Data            ", 5, LCOL,
49, RETURN.CODE%)
   CALL FASTPRT("For soil number     Please enter the piezometric value", 7, LCOL,
49, RETURN.CODE%)
   CALL FASTPRT("for the coordinates below:                            ", 8, LCOL,
49, RETURN.CODE%)
   CALL FASTPRT("X(    ) =                                             ", 10, LCOL,
49, RETURN.CODE%)
   CALL FASTPRT("Y(    ) =                                             ", 11, LCOL,
49, RETURN.CODE%)
   CALL FASTPRT("===> piezometric value =                              ", 13, LCOL,
49, RETURN.CODE%)
   CALL FASTPRT("        !!! REMEMBER TO USE COMPATIBLE UNITS !!!      ", 14, LCOL,
49, RETURN.CODE%)
   CALL FASTPRT(STR$(K), 7, 27, 59, RETURN.CODE%)

   DO                                     'begin I loop
      DO                                  'begin J loop
         SELECT CASE ExitCode
```

```
            CASE 903
               CALL FASTPRT(STR$(I) + SPACE$(1), 10, 14, 59, RETURN.CODE%)
               CALL FASTPRT(STR$(x(I)) + SPACE$(4), 10, 21, 59, RETURN.CODE%)
               CALL FASTPRT(STR$(J) + SPACE$(1), 11, 14, 59, RETURN.CODE%)
               CALL FASTPRT(STR$(y(J)) + SPACE$(4), 11, 21, 59, RETURN.CODE%)
               NewGetIn LJustStr$(uz(I, J, K)), 1, 7, 13, 38, 10, uz$, ab$

               IF ab$ = CHR$(ESC) AND I = 1 AND J = 1 THEN
                  ExitCode = 666
                  PCOPY 1, 0
                  EXIT SUB
               ELSEIF ab$ = CHR$(ESC) AND J = 1 THEN
                  I = I - 1
                  J = ny
                  ExitCode = 903
               ELSEIF ab$ = CHR$(ESC) THEN
                  J = J - 1
                  ExitCode = 903
               ELSEIF Filter(uz$, "-1234567890.", "N") <> "" THEN
                  ERROR 254
                  uz$ = ""
               ELSE
                  uz(I, J, K) = VAL(uz$)
                  'PRINT #3, uz(I, J, K);
                  ExitCode = 903
                  J = J + 1
               END IF

         END SELECT
      LOOP WHILE J <= ny

      'PRINT #3,
      J = 1
      I = I + 1
   LOOP WHILE I <= nx
   PCOPY 1, 0
END SUB

SUB PorePresData (ExitCode AS INTEGER)

   IF ExitCode = 80 THEN
      K = 1                                'initialize variables
   ELSEIF ExitCode = 88 THEN
      K = ns
      ExitCode = 80
   END IF

   DO                                      'begin K loop
      SELECT CASE ExitCode
            CASE 80

               PCOPY 0, 1
               CALL MAKEWIND(5, LCOL - 2, 15, RCOL + 2, 2, 1, 11, GROW, SHADOW, "",
RETURN.CODE%)

               CALL FASTPRT("PORE PRESSURE DATA:
", 5, LCOL, 49, RETURN.CODE%)
               CALL FASTPRT("Please select the porepressure model type from the
list", 7, LCOL, 49, RETURN.CODE%)
               CALL FASTPRT("below:
", 8, LCOL, 49, RETURN.CODE%)
               CALL FASTPRT("1 - Pore pressure ratio (Ru)
", 10, LCOL, 49, RETURN.CODE%)
               CALL FASTPRT("2 - Piezometric Surfaces
", 11, LCOL, 49, RETURN.CODE%)
               CALL FASTPRT("For soil number     , the model you choose is:
", 13, LCOL, 49, RETURN.CODE%)
               CALL FASTPRT("                                        (Enter 1 or 2)
", 14, LCOL, 49, RETURN.CODE%)
```

```
            ExitCode = 900

         CASE 900
            CALL FASTPRT(STR$(K), 13, 27, 59, RETURN.CODE%)
            NewGetIn LJustStr$(utype(K)), 1, 1, 13, 58, 10, utype$, ab$
            IF ab$ = CHR$(ESC) AND K = 1 THEN
               ExitCode = 666
               PCOPY 1, 0
               EXIT SUB
            ELSEIF ab$ = CHR$(ESC) THEN
               ExitCode = 900
               K = K - 1
            ELSEIF Filter(utype$, "-1234567890.", "N") <> "" THEN
               ERROR 254
               utype$ = ""
            ELSE
               utype(K) = VAL(utype$)
               'PRINT #3, utype(K);
               'PRINT #3,

               IF utype(K) = 1 THEN
                  PCOPY 0, 2
                  CALL FASTPRT("Then enter Ru for this soil: ", 15, LCOL, 49,
RETURN.CODE%)
                  NewGetIn LJustStr$(ru(K)), 1, 6, 15, 43, 10, ru$, ab$
                  IF ab$ = CHR$(ESC) THEN
                     PCOPY 2, 0
                     ExitCode = 900
                  ELSEIF Filter(ru$, "-1234567890.", "N") <> "" THEN
                     ERROR 254
                     ru$ = ""
                  ELSE
                     ru(K) = VAL(ru$)
                     'PRINT #3, ru
                     ExitCode = 900
                     K = K + 1
                     PCOPY 2, 0
                  END IF

               ELSEIF utype(K) = 2 THEN
                  PCOPY 1, 0
                  PiezoLine ExitCode, K
                  IF ExitCode = 666 THEN
                     ExitCode = 80
                  ELSE
                     ExitCode = 80
                     K = K + 1
                  END IF
               ELSE
                  ERROR 250
               END IF
            END IF
      END SELECT
   LOOP WHILE K <= ns
   PCOPY 1, 0
END SUB

SUB PrintData (ExitCode AS INTEGER)

    TextLine$(1) = "Your data are about to be written to the file " + UCASE$(Nam$)
    TextLine$(2) = "To confirm operation press 'y'"
    TextLine$(3) = "Any other key will bring you back"

   AskWindow 3, TextLine$(), KeyPressed$

   IF UCASE$(KeyPressed$) = "Y" THEN
      PCOPY 0, 4
      NotifyWindow "Please wait", "Your data are been procesed"
```

```
    ELSE
       ExitCode = 666
       EXIT SUB
    END IF

    OPEN Nam$ FOR OUTPUT AS #3

    '---------------- file header for data file -------------------------
    PRINT #3, "PCSTBL3D Version 2.0"

    '---------------- print number of data points and number of soils ---
    PRINT #3, nx, ny
    PRINT #3, ns
    '---------------- print x coordinates -------------------------------
    FOR I = 1 TO nx
       PRINT #3, x(I);
    NEXT I
    PRINT #3,
    '---------------- print y coordinates -------------------------------
    FOR I = 1 TO ny
       PRINT #3, y(I);
    NEXT I
    PRINT #3,
    '---------------- print soil coordinates ----------------------------
    FOR K = 1 TO ns
       FOR I = 1 TO nx
          FOR J = 1 TO ny
             PRINT #3, z(I, J, K);
          NEXT J
          PRINT #3,
       NEXT I
    NEXT K
    '---------------- print surface generation data 1 -------------------
    PRINT #3, xaprin
    PRINT #3, yamin; dyamin; yamax; dyamax
    '---------------- print surface generation data 2 -------------------
    FOR I = 1 TO ny
       PRINT #3, xmin1(I); dxmin1(I); xmin2(I); dxmin2(I)
    NEXT I
    '---------------- print vertical constarints ------------------------
    FOR I = 1 TO nx
       FOR J = 1 TO ny
          PRINT #3, zmin(I, J); dzmin(I, J);
       NEXT J
       PRINT #3,
    NEXT I
    '---------------- print soil properties -----------------------------
    FOR I = 1 TO ns
       PRINT #3, Gama(I), C(I), Fi(I)
    NEXT I
    '---------------- print pore pressure data --------------------------
    FOR K = 1 TO ns
       PRINT #3, utype(K);
       PRINT #3,
       IF utype(K) = 1 THEN
          PRINT #3, ru(K)
       ELSE
          FOR I = 1 TO nx
             FOR J = 1 TO ny
                PRINT #3, uz(I, J, K);
             NEXT J
             PRINT #3,
          NEXT I
       END IF
    NEXT K
    CLOSE
    PCOPY 4, 0

END SUB
```

```
SUB SoilCoord (ExitCode AS INTEGER)

   IF ExitCode = 30 THEN
      IndexM = 1  'Initialize index variables
      IndexI = 1
      IndexJ = 1
   ELSEIF ExitCode = 33 THEN
      IndexM = ns
      IndexI = nx
      IndexJ = ny
   END IF

   PCOPY 0, 1
   CALL MAKEWIND(5, LCOL - 2, 11, RCOL + 2, 2, 1, 11, GROW, SHADOW, "",
RETURN.CODE%)

   CALL FASTPRT("Now you will enter the soil layers coordinates for    ", 5, LCOL,
49, RETURN.CODE%)
   CALL FASTPRT("each grid point:                                      ", 6, LCOL,
49, RETURN.CODE%)
   CALL FASTPRT("For SOIL number:                                      ", 8, LCOL,
49, RETURN.CODE%)
   CALL FASTPRT("For point X(    ), and Y(    ) enter value of Z =     ", 9, LCOL,
49, RETURN.CODE%)
   CALL FASTPRT("Remember to use consistent length units...            ", 11, LCOL,
49, RETURN.CODE%)

   FOR M = IndexM TO ns
      FOR I = IndexI TO nx
        FOR J = IndexJ TO ny

            CALL FASTPRT(STR$(M), 8, 28, 59, RETURN.CODE%)
            CALL FASTPRT(STR$(I) + SPACE$(1), 9, 24, 59, RETURN.CODE%)
            CALL FASTPRT(STR$(J) + SPACE$(1), 9, 37, 59, RETURN.CODE%)

            NewGetIn LJustStr$(z(I, J, M)), 1, 6, 9, 63, 10, z$, ab$

            IF ab$ = CHR$(ESC) AND M = 1 AND I = 1 AND J = 1 THEN
               ExitCode = 666
               PCOPY 1, 0
               EXIT SUB
            ELSEIF ab$ = CHR$(ESC) AND I = 1 AND J = 1 THEN
               M = M - 1
               I = ny
               J = ny - 1
            ELSEIF ab$ = CHR$(ESC) AND J = 1 THEN
               I = I - 1
               J = ny - 1
            ELSEIF ab$ = CHR$(ESC) THEN
               J = J - 2
            ELSEIF Filter(z$, "-1234567890.", "N") <> "" THEN
               ERROR 254
               z$ = ""
               J = J - 1
            ELSE
               z(I, J, M) = VAL(z$)
              'PRINT #3, z(I, J, M);
            END IF
         NEXT J

      NEXT I
   NEXT M
   PCOPY 1, 0
END SUB

SUB SoilPropData (ExitCode AS INTEGER)

   IF ExitCode = 70 THEN
      I = 1
```

```
   ELSE
      I = ns
   END IF

   PCOPY 0, 1
   CALL MAKEWIND(5, LCOL - 2, 16, RCOL + 2, 2, 1, 11, GROW, SHADOW, "",
RETURN.CODE%)

   CALL FASTPRT("Soil Properties Data:                          ", 5, LCOL, 49,
RETURN.CODE%)
   CALL FASTPRT("Now you will enter the strength properties of", 7, LCOL, 49,
RETURN.CODE%)
   CALL FASTPRT("the soils:                                     ", 8, LCOL, 49,
RETURN.CODE%)
   CALL FASTPRT("For soil number     ,enter:                    ", 10, LCOL, 49,
RETURN.CODE%)
   CALL FASTPRT("Unit weight ...........                        ", 12, LCOL, 49,
RETURN.CODE%)
   CALL FASTPRT("Cohesion ..............                        ", 13, LCOL, 49,
RETURN.CODE%)
   CALL FASTPRT("Shear Angle ...........                        ", 14, LCOL, 49,
RETURN.CODE%)
   CALL FASTPRT("   !!! REMEMBER TO USE COMPATIBLE UNITS !!!  ", 16, LCOL, 49,
RETURN.CODE%)

   CALL FASTPRT(LJustStr$(Gama(I)) + SPACE$(6 - LEN(LJustStr$(Gama(I)))), 12, 36,
10, RETURN.CODE%)
   CALL FASTPRT(LJustStr$(C(I)) + SPACE$(6 - LEN(LJustStr$(C(I)))), 13, 36, 10,
RETURN.CODE%)
   CALL FASTPRT(LJustStr$(Fi(I)) + SPACE$(6 - LEN(LJustStr$(Fi(I)))), 14, 36, 10,
RETURN.CODE%)

   DO
      SELECT CASE ExitCode

         CASE 70
            CALL FASTPRT(STR$(I), 10, 28, 59, RETURN.CODE%)
            NewGetIn LJustStr$(Gama(I)), 1, 6, 12, 36, 10, Gama$, ab$
            IF ab$ = CHR$(ESC) AND I = 1 THEN
               ExitCode = 666
               PCOPY 1, 0
               EXIT SUB
            ELSEIF ab$ = CHR$(ESC) THEN
               I = I - 1
               CALL FASTPRT(LJustStr$(Gama(I)) + SPACE$(6 -
LEN(LJustStr$(Gama(I)))), 12, 36, 10, RETURN.CODE%)
               CALL FASTPRT(LJustStr$(C(I)) + SPACE$(6 - LEN(LJustStr$(C(I)))), 13,
36, 10, RETURN.CODE%)
               CALL FASTPRT(LJustStr$(Fi(I)) + SPACE$(6 - LEN(LJustStr$(Fi(I)))),
14, 36, 10, RETURN.CODE%)
               ExitCode = 77
            ELSEIF Filter(Gama$, "-1234567890.", "N") <> "" THEN
               ERROR 254
               Gama$ = ""
            ELSE
               Gama(I) = VAL(Gama$)
               ExitCode = 900
            END IF

         CASE 900
            NewGetIn LJustStr$(C(I)), 1, 6, 13, 36, 10, C$, ab$
            IF ab$ = CHR$(ESC) THEN
               ExitCode = 70
            ELSEIF Filter(C$, "-1234567890.", "N") <> "" THEN
               ERROR 254
               C$ = ""
            ELSE
               C(I) = VAL(C$)
               ExitCode = 77
```

```
            END IF

         CASE 77
            CALL FASTPRT(STR$(I), 10, 28, 59, RETURN.CODE%)
            NewGetIn LJustStr$(Fi(I)), 1, 6, 14, 36, 10, Fi$, ab$
            IF ab$ = CHR$(ESC) THEN
               ExitCode = 900
            ELSEIF Filter(Fi$, "-1234567890.", "N") <> "" THEN
               ERROR 254
               Fi$ = ""
            ELSE
               Fi(I) = VAL(Fi$)
               'PRINT #3, Gama, C, Fi
               ExitCode = 70
               I = I + 1
               CALL FASTPRT(LJustStr$(Gama(I)) + SPACE$(6 -
LEN(LJustStr$(Gama(I)))), 12, 36, 10, RETURN.CODE%)
               CALL FASTPRT(LJustStr$(C(I)) + SPACE$(6 - LEN(LJustStr$(C(I)))), 13,
36, 10, RETURN.CODE%)
               CALL FASTPRT(LJustStr$(Fi(I)) + SPACE$(6 - LEN(LJustStr$(Fi(I)))),
14, 36, 10, RETURN.CODE%)

            END IF

      END SELECT
   LOOP WHILE I <= ns
   PCOPY 1, 0
END SUB

SUB SurfGenerData1 (ExitCode AS INTEGER)

   PCOPY 0, 1
   CALL MAKEWIND(5, LCOL - 2, 15, RCOL + 2, 2, 1, 11, GROW, SHADOW, "",
RETURN.CODE%)

   CALL FASTPRT("Data for Surface Generation:                          ", 5, LCOL,
49, RETURN.CODE%)
   CALL FASTPRT("Enter number N where X(N) would be the Principal Axis ", 7, LCOL,
49, RETURN.CODE%)
   CALL FASTPRT("of Sliding (ex: x(3)-> N=3) .............             ", 8, LCOL,
49, RETURN.CODE%)
   CALL FASTPRT("On the principal axis of Sliding, enter search limits:", 10, LCOL,
49, RETURN.CODE%)
   CALL FASTPRT("Initiation value of Y,(Ymin) .............            ", 12, LCOL,
49, RETURN.CODE%)
   CALL FASTPRT("Range of Ymin ............................            ", 13, LCOL,
49, RETURN.CODE%)
   CALL FASTPRT("Termination value of Y, (Ymax) ...........            ", 14, LCOL,
49, RETURN.CODE%)
   CALL FASTPRT("Range of Ymax ............................            ", 15, LCOL,
49, RETURN.CODE%)

   CALL FASTPRT(LJustStr$(xaprin) + SPACE$(3 - LEN(LJustStr$(xaprin))), 8, 60, 10,
RETURN.CODE%)
   CALL FASTPRT(LJustStr$(yamin) + SPACE$(3 - LEN(LJustStr$(yamin))), 12, 60, 10,
RETURN.CODE%)
   CALL FASTPRT(LJustStr$(dyamin) + SPACE$(3 - LEN(LJustStr$(dyamin))), 13, 60, 10,
RETURN.CODE%)
   CALL FASTPRT(LJustStr$(yamax) + SPACE$(3 - LEN(LJustStr$(yamax))), 14, 60, 10,
RETURN.CODE%)
   CALL FASTPRT(LJustStr$(dyamax) + SPACE$(3 - LEN(LJustStr$(dyamax))), 15, 60, 10,
RETURN.CODE%)

   DO
      SELECT CASE ExitCode

         CASE 40
            NewGetIn LJustStr$(xaprin), 1, 3, 8, 60, 10, xaprin$, ab$
            IF ab$ = CHR$(ESC) THEN
```

```
      ExitCode = 666
      PCOPY 1, 0
      EXIT SUB
   ELSEIF Filter(xaprin$, "-1234567890.", "N") <> "" THEN
      ERROR 254
      xaprin$ = ""
   ELSE
      xaprin = VAL(xaprin$)
      ExitCode = 900
   END IF

CASE 900
   NewGetIn LJustStr$(yamin), 1, 3, 12, 60, 10, yamin$, ab$
   IF ab$ = CHR$(ESC) THEN
      CALL FASTPRT(LJustStr$(yamin), 12, 60, 10, RETURN.CODE%)
      ExitCode = 40
   ELSEIF Filter(yamin$, "-1234567890.", "N") <> "" THEN
      ERROR 254
      yamin$ = ""
   ELSE
      yamin = VAL(yamin$)
      IF yamin <= y(1) THEN
           ERROR 244
           ExitCode = 900
      ELSE
           ExitCode = 901
      END IF
   END IF

CASE 901
   NewGetIn LJustStr$(dyamin), 1, 3, 13, 60, 10, dyamin$, ab$
   IF ab$ = CHR$(ESC) THEN
      CALL FASTPRT(LJustStr$(dyamin), 13, 60, 10, RETURN.CODE%)
      ExitCode = 900
   ELSEIF Filter(dyamin$, "-1234567890.", "N") <> "" THEN
      ERROR 254
      dyamin$ = ""
   ELSE
      dyamin = VAL(dyamin$)
      ExitCode = 902
   END IF

CASE 902
   NewGetIn LJustStr$(yamax), 1, 3, 14, 60, 10, yamax$, ab$
   IF ab$ = CHR$(ESC) THEN
      CALL FASTPRT(LJustStr$(yamax), 14, 60, 10, RETURN.CODE%)
      ExitCode = 901
   ELSEIF Filter(yamax$, "-1234567890.", "N") <> "" THEN
      ERROR 254
      yamax$ = ""
   ELSE
      ExitCode = 44
      yamax = VAL(yamax$)
   END IF

CASE 44
   NewGetIn LJustStr$(dyamax), 1, 3, 15, 60, 10, dyamax$, ab$
   IF ab$ = CHR$(ESC) THEN
      CALL FASTPRT(LJustStr$(dyamax), 15, 60, 10, RETURN.CODE%)
      ExitCode = 902
   ELSEIF Filter(dyamax$, "-1234567890.", "N") <> "" THEN
      ERROR 254
      dyamax$ = ""
   ELSE
      dyamax = VAL(dyamax$)
      IF yamax + dyamax >= y(ny) THEN
       ERROR 245
       ExitCode = 44
      ELSE
```

```
                ExitCode = 999
              END IF
            END IF

      END SELECT

   LOOP UNTIL ExitCode = 999
   PCOPY 1, 0
END SUB

SUB SurfGenerData2 (ExitCode AS INTEGER)

   IF ExitCode = 50 THEN
      IndexI = 1
   ELSE
      IndexI = ny
   END IF

   PCOPY 0, 1
   CALL MAKEWIND(5, LCOL - 2, 15, RCOL + 2, 2, 1, 11, GROW, SHADOW, "",
RETURN.CODE%)

   CALL FASTPRT("Data for Surface Generation:                              ", 5,
LCOL, 49, RETURN.CODE%)
   CALL FASTPRT("You will enter boundary conditions for the search         ", 7,
LCOL, 49, RETURN.CODE%)
   CALL FASTPRT("specifying the width of the random surfaces:              ", 8,
LCOL, 49, RETURN.CODE%)
   CALL FASTPRT("On the axis parallel to X on the coordinate Y(    ), enter:", 10,
LCOL, 49, RETURN.CODE%)
   CALL FASTPRT("Left initiation value of X ..............                 ", 12,
LCOL, 49, RETURN.CODE%)
   CALL FASTPRT("Range of left X ..........................                ", 13,
LCOL, 49, RETURN.CODE%)
   CALL FASTPRT("Right initiation value of X ..............                ", 14,
LCOL, 49, RETURN.CODE%)
   CALL FASTPRT("Range of right X..........................                ", 15,
LCOL, 49, RETURN.CODE%)


   FOR I = IndexI TO ny

      CALL FASTPRT(STR$(I) + SPACE$(1), 10, 58, 59, RETURN.CODE%)
      CALL FASTPRT(LJustStr$(xmin1(I)) + SPACE$(3 - LEN(LJustStr$(xmin1(I)))), 12,
59, 10, RETURN.CODE%)
      CALL FASTPRT(LJustStr$(dxmin1(I)) + SPACE$(3 - LEN(LJustStr$(dxmin1(I)))), 13,
59, 10, RETURN.CODE%)
      CALL FASTPRT(LJustStr$(xmin2(I)) + SPACE$(3 - LEN(LJustStr$(xmin2(I)))), 14,
59, 10, RETURN.CODE%)
      CALL FASTPRT(LJustStr$(dxmin2(I)) + SPACE$(3 - LEN(LJustStr$(dxmin2(I)))), 15,
59, 10, RETURN.CODE%)

      DO
         SELECT CASE ExitCode

            CASE 50
               NewGetIn LJustStr$(xmin1(I)), 1, 3, 12, 59, 10, xmin1$, ab$
               IF ab$ = CHR$(ESC) AND I = 1 THEN
                  ExitCode = 666
                  PCOPY 1, 0
                  EXIT SUB
               ELSEIF ab$ = CHR$(ESC) THEN
                  I = I - 1
                  CALL FASTPRT(STR$(I) + SPACE$(1), 10, 58, 59, RETURN.CODE%)
                  CALL FASTPRT(LJustStr$(xmin1(I)) + SPACE$(3 -
LEN(LJustStr$(xmin1(I)))), 12, 59, 10, RETURN.CODE%)
                  CALL FASTPRT(LJustStr$(dxmin1(I)) + SPACE$(3 -
LEN(LJustStr$(dxmin1(I)))), 13, 59, 10, RETURN.CODE%)
```

```
                CALL FASTPRT(LJustStr$(xmin2(I)) + SPACE$(3 -
LEN(LJustStr$(xmin2(I)))), 14, 59, 10, RETURN.CODE%)
                CALL FASTPRT(LJustStr$(dxmin2(I)) + SPACE$(3 -
LEN(LJustStr$(dxmin2(I)))), 15, 59, 10, RETURN.CODE%)
                ExitCode = 55
             ELSEIF Filter(xmin1$, "-1234567890.", "N") <> "" THEN
                ERROR 254
                xmin1$ = ""
             ELSE
                xmin1(I) = VAL(xmin1$)
                ExitCode = 900
             END IF

          CASE 900
             NewGetIn LJustStr$(dxmin1(I)), 1, 3, 13, 59, 10, dxmin1$, ab$
             IF ab$ = CHR$(ESC) THEN
                CALL FASTPRT(LJustStr$(dxmin1(I)), 13, 59, 10, RETURN.CODE%)
                ExitCode = 50
             ELSEIF Filter(dxmin$, "-1234567890.", "N") <> "" THEN
                ERROR 254
                dxmin$ = ""
             ELSE
                dxmin1(I) = VAL(dxmin1$)
                ExitCode = 901
             END IF

          CASE 901
             NewGetIn LJustStr$(xmin2(I)), 1, 3, 14, 59, 10, xmin2$, ab$
             IF ab$ = CHR$(ESC) THEN
                CALL FASTPRT(LJustStr$(xmin2(I)), 14, 59, 10, RETURN.CODE%)
                ExitCode = 900
             ELSEIF Filter(xmin2$, "-1234567890.", "N") <> "" THEN
                ERROR 254
                xmin2$ = ""
             ELSE
                xmin2(I) = VAL(xmin2$)
                ExitCode = 55
             END IF

          CASE 55
             NewGetIn LJustStr$(dxmin2(I)), 1, 3, 15, 59, 10, dxmin2$, ab$
             IF ab$ = CHR$(ESC) THEN
                CALL FASTPRT(LJustStr$(dxmin2(I)), 15, 59, 10, RETURN.CODE%)
                ExitCode = 901
             ELSEIF Filter(dxmin2$, "-1234567890.", "N") <> "" THEN
                ERROR 254
                dxmin2$ = ""
             ELSE
                ExitCode = 999
                dxmin2(I) = VAL(dxmin2$)
             END IF

       END SELECT

    LOOP UNTIL ExitCode = 999

    IF I < ny THEN
       ExitCode = 50
    END IF

 NEXT I
 PCOPY 1, 0

END SUB

SUB VerticConstr (ExitCode AS INTEGER)

 IF ExitCode = 60 THEN
    I = 1
```

```
      J = 1
   ELSE
      I = nx
      J = ny
   END IF

   PCOPY 0, 1
   CALL MAKEWIND(5, LCOL - 2, 11, RCOL + 2, 2, 1, 11, GROW, SHADOW, "",
RETURN.CODE%)

   CALL FASTPRT("Now you will enter the searching constrains for the   ", 5, LCOL,
49, RETURN.CODE%)
   CALL FASTPRT("search in the Z (vertical) direction for all the grid:", 6, LCOL,
49, RETURN.CODE%)
   CALL FASTPRT("For point X(    ), and Y(    ) enter value of Zmin =  ", 9, LCOL,
49, RETURN.CODE%)
   CALL FASTPRT("                                          delta Z =  ", 10, LCOL,
49, RETURN.CODE%)
   CALL FASTPRT("Remember to use consistent length units...           ", 11, LCOL,
49, RETURN.CODE%)

   CALL FASTPRT(LJustStr$(zmin(I, J)) + SPACE$(6 - LEN(LJustStr$(zmin(I, J)))), 9,
65, 10, RETURN.CODE%)
   CALL FASTPRT(LJustStr$(dzmin(I, J)) + SPACE$(6 - LEN(LJustStr$(dzmin(I, J)))),
10, 65, 10, RETURN.CODE%)

   DO                                'start I loop
      DO                             'start J loop
         SELECT CASE ExitCode

            CASE 60
               CALL FASTPRT(STR$(I) + SPACE$(1), 9, 24, 59, RETURN.CODE%)
               CALL FASTPRT(STR$(J) + SPACE$(1), 9, 37, 59, RETURN.CODE%)
               CALL FASTPRT(LJustStr$(zmin(I, J)) + SPACE$(6 - LEN(LJustStr$(zmin(I,
J)))), 9, 65, 10, RETURN.CODE%)
               CALL FASTPRT(LJustStr$(dzmin(I, J)) + SPACE$(6 -
LEN(LJustStr$(dzmin(I, J)))), 10, 65, 10, RETURN.CODE%)
               NewGetIn LJustStr$(zmin(I, J)), 1, 6, 9, 65, 10, zmin$, ab$
               IF ab$ = CHR$(ESC) AND I = 1 AND J = 1 THEN
                  ExitCode = 666
                  PCOPY 1, 0
                  EXIT SUB
               ELSEIF ab$ = CHR$(ESC) AND J = 1 THEN
                  I = I - 1
                  J = ny
                  CALL FASTPRT(LJustStr$(zmin(I, J)), 9, 65, 10, RETURN.CODE%)
                  ExitCode = 66
               ELSEIF ab$ = CHR$(ESC) THEN
                  J = J - 1
                  CALL FASTPRT(LJustStr$(zmin(I, J)), 9, 65, 10, RETURN.CODE%)
                  ExitCode = 66
               ELSEIF Filter(zmin$, "-1234567890.", "N") <> "" THEN
                  ERROR 254
                  zmin$ = ""
               ELSE
                  zmin(I, J) = VAL(zmin$)
                  ExitCode = 66
               END IF

            CASE 66
               CALL FASTPRT(STR$(I) + SPACE$(1), 9, 24, 59, RETURN.CODE%)
               CALL FASTPRT(STR$(J) + SPACE$(1), 9, 37, 59, RETURN.CODE%)
               CALL FASTPRT(LJustStr$(zmin(I, J)) + SPACE$(6 - LEN(LJustStr$(zmin(I,
J)))), 9, 65, 10, RETURN.CODE%)
               CALL FASTPRT(LJustStr$(dzmin(I, J)) + SPACE$(6 -
LEN(LJustStr$(dzmin(I, J)))), 10, 65, 10, RETURN.CODE%)
               NewGetIn LJustStr$(dzmin(I, J)), 1, 6, 10, 65, 10, dzmin$, ab$
               IF ab$ = CHR$(ESC) THEN
                  CALL FASTPRT(LJustStr$(dzmin(I, J)), 10, 65, 10, RETURN.CODE%)
```

```
                ExitCode = 60
             ELSEIF Filter(dzmin$, "-1234567890.", "N") <> "" THEN
                ERROR 254
                dzmin$ = ""
             ELSE
                dzmin(I, J) = VAL(dzmin$)
                IF zmin(I, J) + dzmin(I, J) >= z(I, J, 1) THEN
                  ERROR 246
                ELSE
                    J = J + 1
                    ExitCode = 60
                END IF
             END IF

         END SELECT

        LOOP WHILE J <= ny
        'PRINT #3,

   I = I + 1
   J = 1
   LOOP WHILE I <= nx
   PCOPY 1, 0

END SUB

SUB XYCoord (ExitCode AS INTEGER)

   SHARED x(), y()
   IF ExitCode = 20 THEN
      IndexX = 1     'Initialize variables
      IndexY = 1
   ELSEIF ExitCode = 22 THEN
      IndexX = nx
      IndexY = ny
   ELSE
   END IF

   PCOPY 0, 1
   CALL MAKEWIND(5, LCOL - 2, 11, RCOL + 2, 2, 1, 11, GROW, SHADOW, "",
RETURN.CODE%)

   CALL FASTPRT("Now you will enter the actual coordinates of the   ", 5, LCOL, 49,
RETURN.CODE%)
   CALL FASTPRT("points...                                          ", 6, LCOL, 49,
RETURN.CODE%)
   CALL FASTPRT("                                                   ", 7, LCOL, 49,
RETURN.CODE%)
   CALL FASTPRT("For point X(    ), enter its coordinate value: x = ", 8, LCOL, 49,
RETURN.CODE%)
   CALL FASTPRT("For point Y(    ), enter its coordinate value: y = ", 9, LCOL, 49,
RETURN.CODE%)
   CALL FASTPRT("                                                   ", 10, LCOL, 49,
RETURN.CODE%)
   CALL FASTPRT("Remember to use consistent length units...         ", 11, LCOL, 49,
RETURN.CODE%)

   CALL FASTPRT(STR$(IndexX) + SPACE$(1), 8, 24, 59, RETURN.CODE%)
   CALL FASTPRT(STR$(IndexY) + SPACE$(1), 9, 24, 59, RETURN.CODE%)

   CALL FASTPRT(LJustStr$(x(IndexX)) + SPACE$(6 - LEN(LJustStr$(x(IndexX)))), 8, 63,
10, RETURN.CODE%)
   CALL FASTPRT(LJustStr$(y(IndexY)) + SPACE$(6 - LEN(LJustStr$(y(IndexY)))), 9, 63,
10, RETURN.CODE%)

   DO
      SELECT CASE ExitCode

         CASE 20
```

```
            FOR I = IndexX TO nx
               CALL FASTPRT(STR$(I) + SPACE$(1), 8, 24, 59, RETURN.CODE%)
               NewGetIn LJustStr$(x(I)), 1, 6, 8, 63, 10, x$, ab$

               IF ab$ = CHR$(ESC) AND I = 1 THEN
                  ExitCode = 666
                  PCOPY 1, 0
                  EXIT SUB
               ELSEIF ab$ = CHR$(ESC) THEN
                  I = I - 2
               ELSEIF Filter(x$, "-1234567890.", "N") <> "" THEN
                  ERROR 254
                  x$ = ""
                  I = I - 1
               ELSE
                  x(I) = VAL(x$)
               END IF
            NEXT I
            ExitCode = 22

         CASE 22

               FOR J = IndexY TO ny
                  CALL FASTPRT(STR$(J) + SPACE$(1), 9, 24, 59, RETURN.CODE%)
                  NewGetIn LJustStr$(y(J)), 1, 6, 9, 63, 10, y$, ab$
                  IF ab$ = CHR$(ESC) AND J = 1 THEN
                     CALL FASTPRT(LJustStr$(y(J)), 9, 63, 10, RETURN.CODE%)
                     ExitCode = 20
                     IndexX = nx
                     EXIT FOR
                  ELSEIF ab$ = CHR$(ESC) THEN
                     J = J - 2
                  ELSEIF Filter(y$, "-1234567890.", "N") <> "" THEN
                     ERROR 254
                     y$ = ""
                     J = J - 1
                  ELSE
                     y(J) = VAL(y$)
                     'PRINT #3, y(J);
                  END IF
               NEXT J

            IF J = 1 THEN
               ExitCode = 20
            ELSE
               'PRINT #3,
               ExitCode = 900
            END IF

      END SELECT

   LOOP UNTIL ExitCode = 900
   PCOPY 1, 0
END SUB
```

```
DECLARE SUB PopDira (SEARCH$, SHOWITEMS%, FORE%, BACK%, HFORE%, HBACK%, QUADRANT$,
SHADOW%, NUMFILES%, SELECTFILE$, RETURN.CODE%)
'$INCLUDE: 'CURRENTB.BI'
'Block INFILE works with POPUPS.LIB and GETIN.BAS

LocalHandler:
GlobalHandler
RESUME NEXT

REM $DYNAMIC
SUB InFile (ExitCode AS INTEGER)

   ON ERROR GOTO LocalHandler
   Footer
   CALL MAKEWIND(2, 3, 18, 78, 2, 11, 1, GROW, NOSHADOW, "", RETURN.CODE%)
   CALL MAKEWIND(4, LCOL - 2, 5, RCOL + 2, 2, 1, 11, GROW, SHADOW, "", RETURN.CODE%)

   IF Caller$ = "geometry" THEN
      CALL FASTPRT("Select the name of the file with the 3D geometry you want", 4,
LCOL, 49, RETURN.CODE%)
      CALL FASTPRT("to read ...    Use the cursor keys and press <enter>     ", 5,
LCOL, 49, RETURN.CODE%)
   ELSEIF Caller$ = "edit" THEN
      CALL FASTPRT(" Select the name of the data file you would like to edit ", 4,
LCOL, 49, RETURN.CODE%)
      CALL FASTPRT("               Use the cursor keys and press <enter>     ", 5,
LCOL, 49, RETURN.CODE%)
   END IF

   DO
      CALL PopDira("*.*", 6, 0, 11, 0, 11, "0", 1, numf%, Nam$, RETURN.CODE%)

      IF Nam$ = "" THEN
         ExitCode = 666
         EXIT SUB
      END IF

      OPEN Nam$ FOR INPUT AS #1

      '------------------- checking if file is legal -----------------------
      LINE INPUT #1, Legal$

      IF Legal$ <> "PCSTBL3D Version 2.0" THEN
         ERROR 249
         ExitCode = 666
         CLOSE
      ELSE
         ExitCode = 999
      END IF

   LOOP UNTIL ExitCode <> 666

   COLOR 1, 7
   ClearScrn
   PCOPY 0, 3
   NotifyWindow "Please wait", "Reading data file " + Nam$

   '------------------- input nx, ny, ns --------------------------------
   INPUT #1, nx, ny
   INPUT #1, ns

   '------------------- enter X coordinates ----------------------------
   FOR I = 1 TO nx
      INPUT #1, x(I)
   NEXT I

   '------------------- enter Y  coordinates ---------------------------
   FOR I = 1 TO ny
      INPUT #1, y(I)
```

```
   NEXT I

   '------------------- enter Z coordinates ----------------------------

   FOR M = 1 TO ns
      FOR I = 1 TO nx
         FOR J = 1 TO ny

            INPUT #1, z(I, J, M)

         NEXT J
      NEXT I
   NEXT M

   '-----------------------input surf generation data 1 -----------------
   INPUT #1, xaprin
   INPUT #1, yamin, dyamin, yamax, dyamax

   '---------------------- input surf generation data 2 -----------------
   FOR I = 1 TO ny
      INPUT #1, xmin1(I), dxmin1(I), xmin2(I), dxmin2(I)
   NEXT I

   '---------------------- input vertical constraints -------------------
   FOR I = 1 TO nx
      FOR J = 1 TO ny
         INPUT #1, zmin(I, J), dzmin(I, J)
      NEXT J
   NEXT I

   '---------------------- input soil properties ------------------------
   FOR I = 1 TO ns
      INPUT #1, Gama(I), C(I), Fi(I)
   NEXT I

   '---------------------- pore pressure models -------------------------

   FOR K = 1 TO ns
      INPUT #1, utype(K)

      IF utype(K) = 1 THEN
         INPUT #1, ru
      ELSE
         FOR I = 1 TO nx
            FOR J = 1 TO ny
               INPUT #1, uz(I, J, K)
            NEXT J
         NEXT I
      END IF

   NEXT K
   CLOSE
   PCOPY 3, 0

END SUB

REM $STATIC
'*************************************************************************
'                                                                        *
'     SUB PROGRAM NAME          (PARAMETERS)                 STATIC/RECURSIVE *
'-------------------------------------------------------------------------*
'                                                                        *
SUB PopDira (SEARCH$, SHOWITEMS%, FORE%, BACK%, HFORE%, HBACK%, QUADRANT$, SHADOW%,
NUMFILES%, SELECTFILE$, RETURN.CODE%) STATIC

       DEFINT A-Z                              'make all short interger by default

       RETURN.CODE% = 0
       DIR.RETURN.CODE = 0
```

```
'
' not sure that FILES$ will be a FAR array, as it is a var. length string
'

REM     $DYNAMIC                                    'allocate array off far heap
        DIM FILES$(1)                               'allocate an array of only 1 element
REM     $STATIC                                     'default arrays back to Basic data
segment

        FILES.MIN% = UBOUND(FILES$)                 'this set LBOUND to OPTION BASE 1 also

        DIM SIZE.OF.FILE AS STRING * 10

POPDIR.START:
'       ATTR=&H00FF
        ATTR = NUMFILES%

        ATTR = ATTR AND &HFF

        COUNT = &HFF00 OR ATTR                      'Get number of filenames that match
SEARCH$

        I = INT(VARPTR(FILES$(FILES.MIN%)))         'get pointer to start of array to hold
filenames found

        CALL DIR(SEARCH$, I, COUNT, DIR.RETURN.CODE)'see how many files match our
filename spec.

        IF (COUNT = -1) OR (COUNT = 0) THEN         'were any matching filenames found?
             NUMFILES% = 0                          'NO
             SELECTFILE$ = ""
             RETURN.CODE% = -2
           GOTO POPDIR.DONE
        END IF

        NUMFILES% = COUNT

        IF COUNT > 0 THEN                          'allocate the filename array big
            REDIM FILES$(FILES.MIN% TO FILES.MIN% + COUNT)'enough to hold all the
filenames
        END IF

        HEADER$ = SEARCH$                           'this was the filename spec used for
serach

        FOR I = FILES.MIN% TO FILES.MIN% + COUNT'make each entry big enough to hold a
filename
            FILES$(I) = SPACE$(22)
        NEXT

'
        COUNT = ATTR

        I = INT(VARPTR(FILES$(FILES.MIN%)))

        CALL DIR(SEARCH$, I, COUNT, DIR.RETURN.CODE)

        FOR I = FILES.MIN% TO FILES.MIN% + COUNT
            SELECTFILE$ = FILES$(I)
            GOSUB EXPAND.FILES
            FILES$(I) = SELECTFILE$
        NEXT

        MAXITEMS = COUNT                            'this many file names can be displayed
        SHOWFILES = SHOWITEMS%                      'but only display this many at a time

        SELECT.% = FILES.MIN%
```

```
        CALL POPLIST(HEADER$, SHOWFILES, MAXITEMS, FILES$(), FORE%, BACK%, HFORE%,
HBACK%, QUADRANT$, SHADOW%, SELECT.%, RETURN.CODE%)

        IF SELECT.% = 0 THEN
            SELECTFILE$ = ""
        ELSE
            SELECTFILE$ = LEFT$(FILES$(SELECT.%), 12)      'return the filename
selected
        END IF

        GOTO POPDIR.DONE

'
EXPAND.FILES:
        FILENAME$ = LEFT$(SELECTFILE$, 13)
        ASCIIZ = INSTR(FILENAME$, CHR$(0))
        IF ASCIIZ > 0 THEN
            FILENAME$ = LEFT$(FILENAME$, ASCIIZ - 1)
        END IF

        FILENAME$ = FILENAME$ + SPACE$(80)

        FILE.ATTR$ = MID$(SELECTFILE$, 14, 1)
        FILE.ATTR = ASC(FILE.ATTR$)

        FILESIZE$ = ""
        FILEATTR$ = ""

        IF (FILE.ATTR AND &H10) <> 0 THEN
            FILESIZE$ = "  <DIR>   "
        END IF

        IF (FILE.ATTR AND &H8) <> 0 THEN
            FILEATTR$ = FILEATTR$ + "+ LABEL  "
        END IF

        IF (FILE.ATTR AND &H2) <> 0 THEN
            FILEATTR$ = FILEATTR$ + "+ HIDDEN "
        END IF

        IF (FILE.ATTR AND &H4) <> 0 THEN
            FILEATTR$ = FILEATTR$ + "+ SYSTEM "
        END IF

        IF (FILE.ATTR AND &H1) <> 0 THEN
            FILENATTR$ = "+READONLY"
        END IF

        IF (FILE.ATTR AND &H20) <> 0 THEN
            FILEATTR$ = FILEATTR$ + "+ ARCHIVE"
        END IF

        MONTH$ = MID$(SELECTFILE$, 17, 1)
        MONTH = ASC(MONTH$) AND &HE0
        MONTH = MONTH / 32

        MONTH$ = MID$(SELECTFILE$, 18, 1)
        MONTH.TEMP = ASC(MONTH$) AND &H1
        MONTH.TEMP = MONTH.TEMP * 8

        MONTH = MONTH + MONTH.TEMP

        DAY$ = MID$(SELECTFILE$, 17, 1)
        DAY = ASC(DAY$) AND &H1F

        YEAR$ = MID$(SELECTFILE$, 18, 1)
        YEAR = ASC(YEAR$) AND &HFE
        YEAR = YEAR / 2
        YEAR = 1980 + YEAR
```

```
'
        HOURS$ = MID$(SELECTFILE$, 16, 1)
        HOURS = ASC(HOURS$) AND &HF8
        HOURS = HOURS / 8

        MINUTES$ = MID$(SELECTFILE$, 16, 1)
        MINUTES = ASC(MINUTES$) AND &H3
        MINUTES = MINUTES * 8

        MINUTES$ = MID$(SELECTFILE$, 15, 1)
        MINUTES.TEMP = ASC(MINUTES$) AND &HE0
        MINUTES.TEMP = MINUTES.TEMP / 32
        MINUTES = MINUTES + MINUTES.TEMP

        SECONDS$ = MID$(SELECTFILE$, 15, 1)
        SECONDS = ASC(SECONDS$) AND &H1F
        SECONDS = SECONDS * 2

        FILESIZE.ADDR = VARPTR(FILESIZE&)
        POKE FILESIZE.ADDR, ASC(MID$(SELECTFILE$, 19, 1))

        FILESIZE.ADDR = VARPTR(FILESIZE&)
        POKE FILESIZE.ADDR + 1, ASC(MID$(SELECTFILE$, 20, 1))

        FILESIZE.ADDR = VARPTR(FILESIZE&)
        POKE FILESIZE.ADDR + 2, ASC(MID$(SELECTFILE$, 21, 1))

        FILESIZE.ADDR = VARPTR(FILESIZE&)
        POKE FILESIZE.ADDR + 3, ASC(MID$(SELECTFILE$, 22, 1))

        IF FILESIZE$ = "" THEN
            FILESIZE$ = STR$(FILESIZE&)
            SIZE.OF.FILE = SPACE$(10)
            RSET SIZE.OF.FILE = FILESIZE$
            FILESIZE$ = SIZE.OF.FILE
        END IF

        FILEDATE$ = RIGHT$(STR$(MONTH), 2) + "-" + RIGHT$(STR$(DAY), 2) + "-" +
RIGHT$(STR$(YEAR), 2)

        INSTR.POS = INSTR(2, FILEDATE$, " ")

        IF INSTR.POS > 1 THEN
            MID$(FILEDATE$, INSTR.POS, 1) = "0"
        END IF

        FILETIME$ = RIGHT$(STR$(HOURS), 2) + ":" + RIGHT$(STR$(MINUTES), 2)

        INSTR.POS = INSTR(2, FILETIME$, " ")

        IF INSTR.POS > 1 THEN
            MID$(FILETIME$, INSTR.POS, 1) = "0"
        END IF

        MID$(FILENAME$, 13) = FILESIZE$
        MID$(FILENAME$, 24) = FILEDATE$
        MID$(FILENAME$, 34) = FILETIME$
'       MID$(FILENAME$,40)=FILEATTR$

        FILENAME$ = LEFT$(RTRIM$(FILENAME$), 12)

        SELECTFILE$ = FILENAME$

        RETURN

'
POPDIR.DONE:
        ERASE FILES$                            'free memory allocated to array
        HEADER$ = ""
```

```
        FILENAME$ = ""
        FILESIZE$ = ""
        FILEATTR$ = ""
        FILETIME$ = ""
        FILEDATE$ = ""
        MONTH$ = ""
        DAY$ = ""
        YEAR$ = ""
        HOURS$ = ""
        MINUTES$ = ""
        SECONDS$ = ""

END SUB
```

APPENDIX D NEGATIVE NUMBERS FOR PRINTS

Figure	Film Number	Negative Number	Location of Negative
8	1	1	All negatives located at the following
9	1	3	address:
10	1	5	PURDUE UNIVERSITY
11	1	7	SCHOOL OF CIVIL ENGINEERING
12	1	9	West Lafayette, IN 47907
13	1	12	Room G245
14	1	17	(317) 494-5034
15	1	19	
16	1	24	
17	1	26	
18	1	30	
19	2	1	
20	2	4	
21	2	10	

COVER DESIGN BY ALDO GIORGINI